EXHIBIT A

EXHIBIT A

STATE OF NEVADA
DEPARTMENT OF BUSINESS AND INDUSTRY
REAL ESTATE DIVISION
3300 West Sahara Avenue, Suite 325, Las Vegas, NV 89102
(702) 486-4480 * Toll free: (877) 829-9907 * Fax: (702) 486-4520
E-mail: CICOmbudsman@red.nv.gov http://www.red.nv.gov

RECEIVED
JUL 20 2021
Dept of Business & Industry
NV Real Estate Division - LV MAIL

INTERVENTION AFFIDAVIT (Form 530)

Statements 1 through 4 cited below must be met prior to filing this Affidavit. **Please verify that you have met the requirements by initialing in each box.** As the aggrieved party, you:

1. Are filing this complaint not later than 1 year after you discovered or reasonably should have discovered the alleged violation. Date alleged violation took place: June 9, 2021
2. Have mailed to the Respondent's last known address **a certified letter, return receipt requested,** specifying in reasonable detail: all alleged violations, any actual damages suffered, and any corrective actions proposed. A copy of this letter and the certified return receipt from the post office must be attached to this form. *Any and all allegations included in the certified letter must also be included on this form.* Any allegation **not** indicated will **not** be considered by the Division.
3. Have provided the Respondent with at least 10 business days to correct the alleged violation(s) pursuant to the governing documents or NRS and NAC 116. All other reasonable efforts to resolve the allegation(s) must have failed prior to filing this Intervention Affidavit.
4. Have stated only one alleged violation per page and have included applicable attachments (Exhibits) behind each such page. It is advised that you make a copy of this package for yourself prior to submission.

Please indicate whether you have spoken to a staff representative from the Ombudsman's Office to understand which specific provision of NRS or NAC 116 may have been violated.

Yes ☐ **No** ☑ If yes, name: Not applicable

STATE OF NEVADA
COUNTY OF: LYON DATE: July 15, 2021

I, JOSEPH F. HUGHES, (Complainant), after being first duly sworn, state under penalty of perjury and based upon personal knowledge have been aggrieved by an alleged violation of Chapter 116 of the Nevada Revised Statutes, Nevada Administrative Code or the governing documents of the association.

1. The person or entity who committed the alleged violation and who was sent the required certified letter is (if multiple, list each Respondent):
   DENNIS DRURY (PRESIDENT), SANDRA MASS (VICE PRESIDENT), PAULA DARRAGH (SECRETARY), DOUG KREIE (TREASURER) DVCA BOARD
2. The Respondent or respondents role in the community:
   OFFICERS OF DAYTON VALLEY COMMUNITY ASSOCIATION BOARD OF DIRECTORS
3. The Homeowners Association involved in this Intervention Affidavit is:
   DAYTON VALLEY COMMUNITY ASSOCIATION
4. List the Association's Secretary of State (SOS) Business ID Number NV20141503953
   To locate SOS ID Number go to the Secretary of State website.

CICC0001

STATE OF NEVADA
DEPARTMENT OF BUSINESS AND INDUSTRY
REAL ESTATE DIVISION
3300 West Sahara Avenue, Suite 325, Las Vegas, NV 89102
(702) 486-4480 * Toll free: (877) 829-9907 * Fax: (702) 486-4520
E-mail: CICOmbudsman@red.nv.gov http://www.red.nv.gov

RECEIVED
JUL 20 2021
Dept of Business & Industry
NV Real Estate Division - LV MAIL

You are required to **state one** alleged violation, with a brief description, per page (reprint this page for each separate alleged violation). Each allegation must have its own supporting documentation (**Exhibit #1 for allegation #1**, and so on), which must be placed directly behind the allegation when submitting this package. ***Do not write "See Attached."*** **If *"See Attached"* is written in the sections below your complaint will not be processed.**

ALLEGED VIOLATION: (To the point, state the alleged violation.)

ALLEGED VIOLATION NUMBER: 1

NRS 116.3103 FAILURE TO EXCERCISE FIDUCIARY RESPONSIBILITY AND ACT IN THE BEST INTEREST OF THE MEMBERSHIP BY NOT PROPERLY REVIEWING CANDIDATE DISCLOSURE STATMENTS. ALLOWING A BOARD MEMBER TO MOTION FOR VOTE AND VOTE ON MATTER THAT BOARD MEMBER WAS DIRECTLY THE SUBJECT MATTER OF REVIEW OF THEIR OWN OMMISSIONS.

RECOMMENDED CORRECTIVE ACTION:

REMOVAL OR NULLIFCATION OF CANDIDATES OR VOTES (KEPLER & KREIE)
REMOVAL OF BOARD MEMBERS FOR WILLFULLY AND KNOWINGLY FAILING TO UPHOLD THEIR FIDUCIARY RESPONSIBILITIES TO THE ASSOCIATION.

SUPPORTING LAW AND/OR GOVERNING DOCUMENTS: (List the applicable laws and/or sections of governing documents.)

NRS 116.3103
NRS 116.31034, (9)(a), (10)

ATTACHMENTS: (List the types of documents included, i.e., budget, notices of violation, governing document provisions, etc. specific to the alleged violation cited above):

COPY OF CERTIFIED LETTER, RECEIPTS OF MAILING TO DVCA BOARD OF DIRECTORS
AUDIO OF 8/9/2021 BOARD MEETING, (THUMB DRIVE) AUDIO OF 1/27/2021 BOARD MEETING (THUMB DRIVE)
ELECTION PACKAGE (THE BALLOT BOX) SUPPORTING MULITPLE VIOLATIONS AS EXHIBITS CANDIDATE STATEMENT (KEPLER & KREIE)
BHARATH CHANDRA ADMIN VS. VISTANA CONDOMINIUM ASSOCIATION (THUMB DRIVE) FOR REFERENCE
COPY OF BALLOT, LETTER OF NOTICE, PROOF OF DELIVERY,

I have read the foregoing Affidavit consisting of 10 pages (including all additional attached pages), and it is true and correct to the best of my knowledge andbelief.

Signature of Complainant _____
Name JOSEPH F. HUGHES
Street Address 905 LAKEVIEW DR
City, State, Zip DAYTON, NV 89403
Phone (775) 230-6728

State of NV County of Lyon
Subscribed and sworn to before me
This 15th day of July 2021.

_____ NOTARY PUBLIC

ASHLEY COLE
NOTARY PUBLIC
STATE OF NEVADA
No. 17-4156-12 My Appt. Exp. Sept. 28, 2021

You can mail or hand-deliver the completed affidavit package to:
NEVADA REAL ESTATE DIVISION
OFFICE OF THE OMBUDSMAN
COMMON-INTEREST COMMUNITIES AND
CONDOMINIUM HOTELS PROGRAM
3300 W. SAHARA AVE., SUITE 325, LAS VEGAS, NEVADA 89102
Email and fax submissions will not be accepted
It is advised that you retain a copy of this packet for yourself prior to submission.

STATE OF NEVADA
DEPARTMENT OF BUSINESS AND INDUSTRY
REAL ESTATE DIVISION
3300 West Sahara Avenue, Suite 325, Las Vegas, NV 89102
(702) 486-4480 * Toll free: (877) 829-9907 * Fax: (702) 486-4520
E-mail: CICOmbudsman@red.nv.gov http://www.red.nv.gov

RECEIVED
JUL 20 2021
Dept of Business & Industry
NV Real Estate Division - LV MAIL

INTERVENTION AFFIDAVIT (Form 530)

Statements 1 through 4 cited below must be met prior to filing this Affidavit. **Please verify that you have met the requirements by initialing in each box.** As the aggrieved party, you:

1. Are filing this complaint not later than 1 year after you discovered or reasonably should have discovered the alleged violation. Date alleged violation took place: _____
2. Have mailed to the Respondent's last known address **a certified letter, return receipt requested,** specifying in reasonable detail: all alleged violations, any actual damages suffered, and any corrective actions proposed. A copy of this letter and the certified return receipt from the post office must be attached to this form. *Any and all allegations included in the certified letter must also be included on this form.* Any allegation **not** indicated will **not** be considered by the Division.
3. Have provided the Respondent with at least 10 business days to correct the alleged violation(s) pursuant to the governing documents or NRS and NAC 116. All other reasonable efforts to resolve the allegation(s) must have failed prior to filing this Intervention Affidavit.
4. Have stated only one alleged violation per page and have included applicable attachments (Exhibits) behind each such page. It is advised that you make a copy of this package for yourself prior to submission.

Please indicate whether you have spoken to a staff representative from the Ombudsman's Office to understand which specific provision of NRS or NAC 116 may have been violated.

Yes ☐ **No** ☒ If yes, name: _____

STATE OF NEVADA
COUNTY OF: LYON DATE: July 15, 2021

I, _____, (Complainant), after being first duly sworn, state under penalty of perjury and based upon personal knowledge have been aggrieved by an alleged violation of Chapter 116 of the Nevada Revised Statutes, Nevada Administrative Code or the governing documents of the association.

1. The person or entity who committed the alleged violation and who was sent the required certified letter is (if multiple, list each Respondent):

   _____

2. The Respondent or respondents role in the community:

   _____

3. The Homeowners Association involved in this Intervention Affidavit is:

   _____

4. List the Association's Secretary of State (SOS) Business ID Number _____

   To locate SOS ID Number go to the Secretary of State website.

STATE OF NEVADA
DEPARTMENT OF BUSINESS AND INDUSTRY
REAL ESTATE DIVISION
3300 West Sahara Avenue, Suite 325, Las Vegas, NV 89102
(702) 486-4480 * Toll free: (877) 829-9907 * Fax: (702) 486-4520
E-mail: CICOmbudsman@red.nv.gov http://www.red.nv.gov

RECEIVED
JUL 20 2021
Dept of Business & Industry
NV Real Estate Division - LV MAIL

You are required to **state one** alleged violation, with a brief description, per page (reprint this page for each separate alleged violation). Each allegation must have its own supporting documentation (**Exhibit #1 for allegation #1**, and so on), which must be placed directly behind the allegation when submitting this package. ***Do not write "See Attached."*** **If *"See Attached"* is written in the sections below your complaint will not be processed.**

ALLEGED VIOLATION: (To the point, state the alleged violation.)

ALLEGED VIOLATION NUMBER: 2

NRS 116.31034 (9), (a) 9. Each person who is nominated as a candidate for membership on the executive board pursuant to subsection 4 must:

(a) Make a good faith effort to disclose any financial, business, professional or personal relationship or interest that would result or would appear to a reasonable person to result in a potential conflict of interest for the candidate if the candidate were to be elected to serve as a member of the executive board

RECOMMENDED CORRECTIVE ACTION:

NULLIFY VOTES FOR CANDIDATES OR REMOVE FROM BALLOT AS THIS IS THE SECOND OPPORTUNITY THESE CANDIDATES HAD TO FILE A COMPLIANT CANDIDATE DISCLOSUE DOCUMENT. SECOND OPPORTUNITY FOR BOARD TO UNDERSTAND "REASONABLE PERSON" MEANS THE APPEARANCE IS A DISQUALIFIER FOR A CANDIDATE.

SUPPORTING LAW AND/OR GOVERNING DOCUMENTS: (List the applicable laws and/or sections of governing documents.)

NRS 116.31034 (9) (a),

ATTACHMENTS: (List the types of documents included, i.e., budget, notices of violation, governing document provisions, etc. specific to the alleged violation cited above):

CANDIDATATE DISCLOSURE DOCUMENTS COPIES FROM ELECTION PACKAGE. CANDIDATES KEPLER,KREIE (DUPLICATED EVIDENCE FROM VIOLATION 1)
Sharath Chandra Admin vs Vistana Condominium Assoc. (THUMB DRIVE)
AUDIO OF JANUARY 27, 2021 DVCA BOARD MEETING WITH KREIE FAILING TO DISCLOSE INVESTMENT IN GOLF COURSE AND VOTING TO CONTINUE TO PAY FOR GOLF COURSE LANDSCAPING TO BENEFIT HIS INVESTMENT 45.20 MARK OF AUDIO
COPY OF 1/27/21 BOARD MEETING MINUTES

I have read the foregoing Affidavit consisting of 7 pages (including all additional attached pages), and it is true and correct to the best of my knowledge and belief.

Signature of Complainant _____
Name JOSEPH F. HUGHES
Street Address 905 LAKEVIEW DR
City, State, Zip DAYTON, NV 89403
Phone (775) 230-6728

State of NV County of Lyon
Subscribed and sworn to before me
This 15th day of July 2021.

_____ NOTARY PUBLIC

ASHLEY COLE
NOTARY PUBLIC
STATE OF NEVADA
No. 17-4166-12 My Appt. Exp. Sept. 28, 2021

You can mail or hand-deliver the completed affidavit package to:
NEVADA REAL ESTATE DIVISION
OFFICE OF THE OMBUDSMAN
COMMON-INTEREST COMMUNITIES AND
CONDOMINIUM HOTELS PROGRAM
3300 W. SAHARA AVE., SUITE 325, LAS VEGAS, NEVADA 89102
Email and fax submissions will not be accepted
It is advised that you retain a copy of this packet for yourself prior to submission.

STATE OF NEVADA
DEPARTMENT OF BUSINESS AND INDUSTRY
REAL ESTATE DIVISION
3300 West Sahara Avenue, Suite 325, Las Vegas, NV 89102
(702) 486-4480 * Toll free: (877) 829-9907 * Fax: (702) 486-4520
E-mail: CICOmbudsman@red.nv.gov http://www.red.nv.gov

RECEIVED
JUL 20 2021
Dept of Business & Industry
NV Real Estate Division - LV MAIL

INTERVENTION AFFIDAVIT (Form 530)

Statements 1 through 4 cited below must be met prior to filing this Affidavit. **Please verify that you have met the requirements by initialing in each box.** As the aggrieved party, you:

1. Are filing this complaint not later than 1 year after you discovered or reasonably should have discovered the alleged violation. Date alleged violation took place: _____
2. Have mailed to the Respondent's last known address **a certified letter, return receipt requested,** specifying in reasonable detail: all alleged violations, any actual damages suffered, and any corrective actions proposed. A copy of this letter and the certified return receipt from the post office must be attached to this form. *Any and all allegations included in the certified letter must also be included on this form.* Any allegation **not** indicated will **not** be considered by the Division.
3. Have provided the Respondent with at least 10 business days to correct the alleged violation(s) pursuant to the governing documents or NRS and NAC 116. All other reasonable efforts to resolve the allegation(s) must have failed prior to filing this Intervention Affidavit.
4. Have stated only one alleged violation per page and have included applicable attachments (Exhibits) behind each such page. It is advised that you make a copy of this package for yourself prior to submission.

Please indicate whether you have spoken to a staff representative from the Ombudsman's Office to understand which specific provision of NRS or NAC 116 may have been violated.

Yes ☐ No ☒ If yes, name: _____

STATE OF NEVADA
COUNTY OF: LYON DATE: July 15, 2021

I, _____, (Complainant), after being first duly sworn, state under penalty of perjury and based upon personal knowledge have been aggrieved by an alleged violation of Chapter 116 of the Nevada Revised Statutes, Nevada Administrative Code or the governing documents of the association.

1. The person or entity who committed the alleged violation and who was sent the required certified letter is (if multiple, list each Respondent):

   _____

2. The Respondent or respondents role in the community:

   _____

3. The Homeowners Association involved in this Intervention Affidavit is:

   _____

4. List the Association's Secretary of State (SOS) Business ID Number _____

   To locate SOS ID Number go to the Secretary of State website.

CICC0005

STATE OF NEVADA
DEPARTMENT OF BUSINESS AND INDUSTRY
REAL ESTATE DIVISION
3300 West Sahara Avenue, Suite 325, Las Vegas, NV 89102
(702) 486-4480 * Toll free: (877) 829-9907 * Fax: (702) 486-4520
E-mail: CICOmbudsman@red.nv.gov http://www.red.nv.gov

RECEIVED
JUL 20 2021
Dept of Business & Industry
NV Real Estate Division - LV MAIL

You are required to state one alleged violation, with a brief description, per page (reprint this page for each separate alleged violation). Each allegation must have its own supporting documentation (Exhibit #1 for allegation #1, and so on), which must be placed directly behind the allegation when submitting this package. *Do not write "See Attached."* If *"See Attached"* is written in the sections below your complaint will not be processed.

ALLEGED VIOLATION: (To the point, state the alleged violation.)

ALLEGED VIOLATION NUMBER: 3

NRS 116.31034 (10) (a), 2 10. Except as otherwise provided in subsections 11 and 12, unless a person is appointed by the declarant:
(a) A person may not be a candidate for or member of the executive board or an officer of the association if:
(2) The person stands to gain any personal profit or compensation of any kind from a matter before the executive board of the association;

RECOMMENDED CORRECTIVE ACTION:

REMOVE OR NULLIFY VOTES FOR CANDIDATES WITH IMPROPERLY COMPLETED AND REVIEWED DISCLOSURE DOCUMENTS. OWNING ANY PART OF THE GOLF COURSE PROVIDES PERSONAL GAIN OR PROFIT TO ANY EQUITY HOLDER IN THE GOLF COURSE WHO IS ALSO A HOMEOWNER.

SUPPORTING LAW AND/OR GOVERNING DOCUMENTS: (List the applicable laws and/or sections of governing documents.)

NRS 11634 (10) (a) 2

ATTACHMENTS: (List the types of documents included, i.e., budget, notices of violation, governing document provisions, etc. specific to the alleged violation cited above):

BALLOT (COPY)
AUDIO FILE OF 6/9/2021 BOARD MEETING (THUMB DRIVE)
Case # 2019-89 Sharath Chandra Admin. vs Vistana Condominium Association (Thumb Drive)
ALL PREVIOUS AND REDUNDANT EXHIBITS

I have read the foregoing Affidavit consisting of 1 pages (including all additional attached pages), and it is true and correct to the best of my knowledge andbelief.

Signature of Complainant _____
Name JOSEPH F. HUGHES
Street Address 905 LAKEVIEW DR
City, State, Zip DAYTON, NV 89403
Phone (775) 230-6728

State of NV - County of Lyon

Subscribed and sworn to before me
This 15th day of July, 20 21.

_____ NOTARY PUBLIC

ASHLEY COLE
NOTARY PUBLIC
STATE OF NEVADA
No. 17-4156-12 My Appt. Exp. Sept. 28, 2021

You can mail or hand-deliver the completed affidavit package to:
NEVADA REAL ESTATE DIVISION
OFFICE OF THE OMBUDSMAN
COMMON-INTEREST COMMUNITIES AND
CONDOMINIUM HOTELS PROGRAM
3300 W. SAHARA AVE., SUITE 325, LAS VEGAS, NEVADA 89102
Email and fax submissions will not be accepted
It is advised that you retain a copy of this packet for yourself prior to submission.

USPS TRACKING #

9590 9402 4256 8121 5085 69

First-Class Mail
Postage & Fees Paid
USPS
Permit No. G-10

RECEIVED
JUL 20 2021
Dept of Business & Industry
NV Real Estate Division - LV MAIL

United States
Postal Service

• Sender: Please print your name, address, and ZIP+4® in this box •

JOE HUGHES
905 LAKEVIEW DR
DAYTON, NV 89403

SENDER: COMPLETE THIS SECTION

- Complete items 1, 2, and 3.
- Print your name and address on the reverse so that we can return the card to you.
- Attach this card to the back of the mailpiece, or on the front if space permits.

1. Article Addressed to:

DAYTON VALLEY COMMUNITY ASSOC.
ATTN: BOARD OF DIRECTORS
C/O CAMCO
704 WEST NYE LANE #101
CARSON CITY, NV 89703

9590 9402 4256 8121 5085 69

2. Article Number (Transfer from service label)

7019 1120 0001 7374 9239

COMPLETE THIS SECTION ON DELIVERY

A. Signature

X J Thompson ☐ Agent ☐ Addressee

B. Received by (Printed Name) C. Date of Delivery

D. Is delivery address different from item 1? ☐ Yes
If YES, enter delivery address below: ☐ No

3. Service Type

- ☐ Adult Signature
- ☐ Adult Signature Restricted Delivery
- ☐ Certified Mail®
- ☐ Certified Mail Restricted Delivery
- ☐ Collect on Delivery
- ☐ Collect on Delivery Restricted Delivery
- ☐ Mail
- ☐ Mail Restricted Delivery
- ☐ 0)
- ☐ Priority Mail Express®
- ☐ Registered Mail™
- ☐ Registered Mail Restricted Delivery
- ☐ Return Receipt for Merchandise
- ☐ Signature Confirmation™
- ☐ Signature Confirmation Restricted Delivery

PS Form 3811, July 2015 PSN 7530-02-000-9053 Domestic Return Receipt

EXHIBIT #1
VIOLATIONS #1, #2, #3

EXHIBIT #2
Violation 1, 2, 3

June 25, 2021

Dayton Valley Community Association
Attn: Board of Directors
c/o CAMCO
704 West Nye Lane Ste #101
Carson City, NV 89703

RECEIVED
JUL 20 2021
Dept of Business & Industry
NV Real Estate Division - LV MAIL

Joseph F. Hughes
Director DVCA
905 Lakeview Dr
Dayton, NV 89403

Dear, Mr. Drury, Ms Mass, Mr. Kreie, Mrs. Darragh,

This communication is to notify the aforementioned Directors of the intention to file Form 530 Intervention Affidavit on behalf of the members of the Dayton Valley Community Association for violations of the following NRS 116 statutes:

NRS 116.3103

1.) Failure to exercise Fiduciary Responsibility and act in the best interest of the membership. On June 9, 2021 at the Board Meeting the Board was charged to review an Election Package for a delayed Annual Meeting scheduled for July 22, 20221 to be monitored by The Ballot Box. Included in the "Election Package" were "Candidate Disclosure Statements". During review of the Candidates Disclosure Statements, Director Kreie, one of the candidates whose statements was be called into question for review, interupted the review proceedings and made a motion to call for a vote of the Board to accept the Election Package in it's entirety. The motion was seconded and voted upon by Board Members Drury, Mass, Darragh and Kreie assenting and Board Members Puzzo and Hughes dissenting. The motion subsequently carried 4 to 2. Director Kreie wrongfully interupted a Board discussion upon which he was to be a subject of and called for a vote on matters that were being discussed before completion in front of the membership. The Board by not allowing the issues surrounding the "Candidate Disclosure Statements" to be discussed to completion failed to uphold their Fiduciary Responsibility to the Association.

NRS 116.31034 (9) (a), (b.)

Failing to thoroughly review the Candidates Disclosure Documents in the election package by not reviewing the documents for potential conflicts of interest and for insufficiently completed by the candidates as required by State of Nevada Real Estate Divisions Ombudsman's Office.

NRS 116.31034 (10) (a) (2)

Director Kreie is a proclaimed investor in Tour Spec's.

Director Kreie was an investor in Tour Spec's in January 27, 2021 when a motion was brought by Treasurer Joseph Hughes to discontinue using membership funds to pay for golf course landscaping. The motion carried 4 to 2, with Directors Hughes, Puzzo, Mass and Darragh voting affirmative and Directiors Drury and Kreie in the negataive. Director Kreie wrongfully failed to disclose he was an owner of Tour Spec's, the company that had just completed purchase of the Dayton Valley Golf Course. Director Kreie wrongfully acted against his fiduciary responsibilities and conflict of interest responsibilities to the Association.

Candidate Kepler initially fails to disclose he is the owner of Tour Spec's the main entity owning and managing the golf course.

The corrective actions being sought is removal of Director/Candidate Kreie and Candidate Kepler from the July 22, 2021 Annual Meeting ballot, or subsequently, nullification of votes for either candidate.

Respectfully,

Joseph F. Hughes
Director
Dayton Valley Community Association

Kreie since 1/27/21 investor in Tour Specs (connected to the golf course) when did he disclose he was an owner? potential conflict ??

This section look like there may be something

EXHIBIT #3
VIOLATIONS
1, 2, 3

Dayton Valley Community Association
Annual Meeting 7/22/21
Secret Ballot

RECEIVED
JUL 20 2021
Dept of Business & Industry
NV Real Estate Division - LV MAIL

You have 7 total votes. You may cast 1 vote each for as many as 7 different candidates. Ballots with more than 7 total votes cast will be void. Less than 7 votes is permitted. Mark as many as 7 votes with an 'X' or '√'

- ☐ Leandra Carr
- ☐ Carla Cole – OUT
- ☐ Paula Darragh
- ☐ Dennis Drury
- ☐ Mary W. Farias
- ☐ Steven Gallisdorfer
- ☐ Joseph Hughes
- ☐ Jim Kepler – OUT
- ☐ Doug Kreie – OUT
- ☐ Joan Latimer
- ☐ Sandra (Sandy) Mass
- ☐ Lisa Miller-Hobbs
- ☐ Amy Puzzo
- ☐ Roger Rocha – OUT
- ☐ Steve Simoni – ?
- ☐ Rich Wilde – OUT

VOTING INSTRUCTIONS ON REVERSE

EXHIBIT #4A
VIOLATIONS #1, #2, #3

9874888-14-3-4

DAYTON VALLEY COMMNITY ASSOCIATION

RECEIVED
JUL 20 2021

Candidacy Disclosure Statement

s form is provided for Homeowners who wish to run for the Board of Directors (you may nominate yourself). You must return this form to us no later than March 24, 2021 by 5:00 PM. The official meeting notice advising the exact date, time and location of the Election meeting will be mailed to all homeowners eligible to vote at a later date. There are seven (7) seats on the Board to fill.

NAME OF NOMINEE: DOUG KREIE

ARE YOU A HOMEOWNER IN THE ASSOCIATION STATED ABOVE? _____ _____

(YES) NO

Per NRS 116.31034 (5) (a) and (b), please complete the following information regarding your candidacy. Please print your responses

1.) Each person whose name is placed on the ballot as a candidate for a member of the executive Board must:

(a) Make a good faith effort to disclose any financial, business, professional or personal relationship or interest that would result or would appear to a reasonable person to result in a potential conflict of interest for the candidate if the candidate were to be elected to serve as a member of the executive board; and (Please respond to the statutory requirements cited above).

116.3034 (5) (a)

conflict

(b) disclose whether or not the candidate is a member in good standing for the purpose of this paragraph, a candidate shall not be deemed to be in "good standing" if the candidate has any unpaid or past due assessments or construction penalties that are required to be paid to the association. Please answer the question below by placing an X in the correct answer.

I am a member in "Good Standing" with the Association: Yes X **No** ___

2.) Experience: What skills do you feel you have that will contribute to the Board and Association? (Optional):

Self EMPLOYED FOR 30 YEARS DEALING IN ALL ASPECTS OF BUSINESS

3.) Why do you want to serve on the Board? (Optional):

I HAVE BEEN ON THE BOARD FOR 2 YEARS AS ARCHITECURAL COMMITTE CHAIRMAN & WOULD LIKE TO CONTINUE.

I reside in a unit with, am married to, domestic partners with, or am related by blood, adoption or marriage within the third degree of consanguinity or affinity to another person who is also a member of the executive board or is an officer of the association. ____ yes ____ no If yes, please explain on a separate sheet of paper).

Note: Nothing cited in this disclosure is intended to prevent a potential candidate from running for the board of directors. Further, the Board will not prohibit a candidate from appearing on the ballot for failure to provide a disclosure statement, or for providing an inaccurate one or one with content that is defamatory, libelous or profane. Should a candidate not complete a disclosure statement, or should it contain content believed to be defamatory, libelous or profane, the board will note the fact in a statement to be included with election-related mailings. Further, a complaint may be filed with the Real Estate Division against the candidate who does not comply with the disclosure requirement.

Nominee Signature (Required): D. Kreie

By signing this form I acknowledge that NRS 116.31034 requires a candidate to make all disclosures required by NRS 116.31034 in writing to the Association with his/her candidacy information, and that the disclosures must be distributed by the Association to each Member of the Association, with the ballot, in the manner established in the Bylaws of the Association, for that candidate to be eligible for office. By signing this form I agree to allow the Association to release any of the information I have supplied on this form.

9874888 6759FCMP-2

EXHIBIT #4B
VIOLATIONS 1, 2, 3 #4, #4

CANDIDACY DISCLOSURE STATEMENT

(Please Print or Type)

RECEIVED
JUL 20 2021
Dept of Business & Industry
NV Real Estate Division
VIA E-MAIL

Name DOUG KREIS

Address 144 SAWGRASS LN DAYTON NV. 89403
(Street) (City) (State) (Zip)

Are you a unit owner? ..... ☒ Yes ☐ No

(NOTE: NRS 116.31034(1) states: Except as otherwise provided in subsection 5 of NRS 116.212, not later than the termination of any period of declarant's control, the units' owners shall elect an executive board of at least three members, all of whom must be units' owners.)

NRS 116.31034 (9) (a) & (b) and NRS 116.31034 (10) (a) & (b) states the following:

9. Each person who is nominated as a candidate for membership on the executive board pursuant to subsection 4 must:
   (a) Make a good faith effort to disclose any financial, business, professional or personal relationship or interest that would result or would appear to a reasonable person to result in a potential conflict of interest for the candidate if the candidate were to be elected to serve as a member of the executive board; and
   (b) Disclose whether the candidate is a member in good standing. For the purposes of this paragraph, a candidate shall not be deemed to be in "good standing" if the candidate has any unpaid and past due assessments or construction penalties that are required to be paid to the association.
10. Except as otherwise provided in subsections 11 and 12, unless a person is appointed by the declarant:
   (a) A person may not be a candidate for or member of the executive board or an officer of the association if:
      (1) The person resides in a unit with, is married to, is domestic partners with, or is related by blood, adoption or marriage within the third degree of consanguinity or affinity to another person who is also a member of the executive board or is an officer of the association;
      (2) The person stands to gain any personal profit or compensation of any kind from a matter before the executive board of the association; or
      (3) The person, the person's spouse or the person's parent or child, by blood, marriage or adoption, performs the duties of a community manager for that association.

   (b) A person may not be a candidate for or member of the executive board of a master association or an officer of that master association if the person, the person's spouse or the person's parent or child, by blood, marriage or adoption, performs the duties of a community manager for:
      (1) That master association; or
      (2) Any association that is subject to the governing documents of that master association.

Please use the following lines to respond to the statutory requirements pursuant to NRS 116.31034 (9) (a)

Attach additional sheets, if necessary: I AM A MINORITY STOCKHOLDER IN YOUR SPECS Conflict

I am a candidate in good standing pursuant to NRS 116.31034(9) (b): ..... ☒ Yes ☐ No

If no, please explain: _____

Please indicate all that apply to your relation to any board members, officer(s) of the association or community managers:

I am:

- ☐ Residing within the same unit as a board member or officer.
- ☐ Married to a board member or officer.
- ☐ Domestic partners with a board member or officer.
- ☒ **None of the above**

Related to a board member by:

- ☐ Blood
- ☐ Adoption
- ☐ Marriage within the third degree of consanguinity
- ☐ Affinity to another person
- ☒ **None of the above**

The candidate must make all disclosures required pursuant to this subsection in writing to the association with his or her candidacy information. Except as otherwise provided in this subsection, the association shall distribute the disclosures, on behalf of the candidate, to each member of the association with the ballot or, in the event ballots are not prepared and mailed pursuant to subsection 5, in the next regular mailing of the association. The association is not obligated to distribute any disclosure pursuant to this subsection if the disclosure contains information that is believed to be defamatory, libelous or profane.

Any additional information provided by the candidate for the executive board is voluntary and is not a requirement under NRS 116.31034.

Signature of candidate _____ *Date* 6-2-2021

Revised 7/18/19

EXHIBIT #4C
VIOLATION #1, #2, #3

RECEIVED
JUL 20 2021
Dept of Business & Industry
NV Real Estate Division - LV MAIL

My name is Doug Kreie and I am running for reelection to the Board of Directors of the Dayton Valley Home Owners Association

I have 30 years' experience as a business owner. I have worked with financials and expense reports as well as profit and loss, cash flow analysis long term views and forward thinking. If this is the type of person you want on the board I would like your vote. I have served as your architectural committee chairman for the last two and a half years. If you have been happy with the way your applications have been handled I would appreciate your vote.

Also I would like to endorse Dennis Drury, Sandy Mass, and Paula Darragh for reelection.

EXHIBIT #5A
VIOLATIONS #1, #2, #3

Candidacy Disclosure Statement

RECEIVED
JUL 20 2021
Dept of Business & Industry
NV Real Estate Division - LV MAIL

This form is provided for Homeowners who wish to run for the Board of Directors (you may nominate yourself). You must return this form to us no later than March 24, 2021 by 5:00 PM. The official meeting notice advising the exact date, time and location of the Election meeting will be mailed to all homeowners eligible to vote at a later date. There are seven (7) seats on the Board to fill.

NAME OF NOMINEE: ___Jin Kepler_____

ARE YOU A HOMEOWNER IN THE ASSOCIATION STATED ABOVE? ____Yes_____ _____ **YES NO**

Per NRS 116.31034 (5) (a) and (b), please complete the following information regarding your candidacy. Please print your responses.

1.) Each person whose name is placed on the ballot as a candidate for a member of the executive Board must:

(a) Make a good faith effort to disclose any financial, business, professional or personal relationship or interest that would result or would appear to a reasonable person to result in a potential conflict of interest for the candidate if the candidate were to be elected to serve as a member of the executive board; and (Please respond to the statutory requirements cited above).

N/A None 116.31034.(5)(a)

(b) disclose whether or not the candidate is a member in good standing for the purpose of this paragraph, a candidate shall not be deemed to be in "good standing" if the candidate has any unpaid or past due assessments or construction penalties that are required to be paid to the association. Please answer the question below by placing an X in the correct answer.

I am a member in "Good Standing" with the Association: Yes x___ No ___

2.) Experience: What skills do you feel you have that will contribute to the Board and Association? (Optional):

I have personally been a homeowner in Dayton Nv for over 30 Years and have lived at the golf course since 2005. Where I was the head Pro to the golf course from 1991-1998. Then I was the General Manager from 1998-2006. I helped with the homeowners before the HOA was established.

3.) Why do you want to serve on the Board? (Optional):

I want to help with the growth in our community. I enjoy the people and feel now is the time for us to make positive changes going forward. As the new owner to the golf course, I feel that a good relationship between the owners, community and golf course is a positive way to move forward.

I reside in a unit with, am married to, domestic partners with, or am related by blood, adoption or marriage within the third degree of consanguinity or affinity to another person who is also a member of the executive board or is an officer of the association. ____yes _x___ no If yes, please explain on a separate sheet of paper).

Note: Nothing cited in this disclosure is intended to prevent a potential candidate from running for the board of directors. Further, the Board will not prohibit a candidate from appearing on the ballot for failure to provide a disclosure statement, or for providing an inaccurate one or one with content that is defamatory, libelous or profane. Should a candidate not complete a disclosure statement, or should it contain content believed to be defamatory, libelous or profane, the board will note the fact in a statement to be included with election-related mailings. Further, a complaint may be filed with the Real Estate Division against the candidate who does not comply with the disclosure requirement.

Nominee Signature (Required): Jin Kepler
By signing this form I acknowledge that NRS 116.31034 requires a candidate to make all disclosures required by NRS 116.31034 in writing to the Association with his/her candidacy information, and that the disclosures must be distributed by the Association to each Member of the Association, with the ballot, in the manner established in the Bylaws of the Association, for that candidate to be eligible for office. By signing this form I agree to allow the Association to release any of the information I have supplied on this form.

EXHIBIT #5B
VIOLATIONS #1, #2, #3

CANDIDACY DISCLOSURE STATEMENT

(Please Print or Type)

RECEIVED
JUL 20 2021
Dept of Business & Industry
Real Estate Division - LAVL

Name James H. Kepler

Address 681 St. Andrews (Street) Dayton (City) Nv (State) 89403 (Zip)

Are you a unit owner? ..... ☒ Yes ☐ No

(NOTE: NRS 116.31034(1) states: Except as otherwise provided in subsection 5 of NRS 116.212, not later than the termination of any period of declarant's control, the units' owners shall elect an executive board of at least three members, all of whom must be units' owners.)

NRS 116.31034 (9) (a) & (b) and NRS 116.31034 (10) (a) & (b) states the following:

9. Each person who is nominated as a candidate for membership on the executive board pursuant to subsection 4 must:
   (a) Make a good faith effort to disclose any financial, business, professional or personal relationship or interest that would result or would appear to a reasonable person to result in a potential conflict of interest for the candidate if the candidate were to be elected to serve as a member of the executive board; and
   (b) Disclose whether the candidate is a member in good standing. For the purposes of this paragraph, a candidate shall not be deemed to be in "good standing" if the candidate has any unpaid and past due assessments or construction penalties that are required to be paid to the association.
10. Except as otherwise provided in subsections 11 and 12, unless a person is appointed by the declarant:
   (a) A person may not be a candidate for or member of the executive board or an officer of the association if:
      (1) The person resides in a unit with, is married to, is domestic partners with, or is related by blood, adoption or marriage within the third degree of consanguinity or affinity to another person who is also a member of the executive board or is an officer of the association;
      (2) The person stands to gain any personal profit or compensation of any kind from a matter before the executive board of the association; or
      (3) The person, the person's spouse or the person's parent or child, by blood, marriage or adoption, performs the duties of a community manager for that association.

   (b) A person may not be a candidate for or member of the executive board of a master association or an officer of that master association if the person, the person's spouse or the person's parent or child, by blood, marriage or adoption, performs the duties of a community manager for:
      (1) That master association; or
      (2) Any association that is subject to the governing documents of that master association.

Please use the following lines to respond to the statutory requirements pursuant to NRS 116.31034 (9) (a)

Attach additional sheets, if necessary: See Attached Statement

I am a candidate in good standing pursuant to NRS 116.31034(9) (b): ..... ☒ Yes ☐ No

If no, please explain: _____

Please indicate all that apply to your relation to any board members, officer(s) of the association or community managers:

I am:

- ☐ Residing within the same unit as a board member or officer.
- ☐ Married to a board member or officer.
- ☐ Domestic partners with a board member or officer.
- ☒ None of the above

Related to a board member by:

- ☐ Blood
- ☐ Adoption
- ☐ Marriage within the third degree of consanguinity
- ☐ Affinity to another person
- ☒ None of the above

The candidate must make all disclosures required pursuant to this subsection in writing to the association with his or her candidacy information. Except as otherwise provided in this subsection, the association shall distribute the disclosures, on behalf of the candidate, to each member of the association with the ballot or, in the event ballots are not prepared and mailed pursuant to subsection 5, in the next regular mailing of the association. The association is not obligated to distribute any disclosure pursuant to this subsection if the disclosure contains information that is believed to be defamatory, libelous or profane.

Any additional information provided by the candidate for the executive board is voluntary and is not a requirement under NRS 116.31034.

James H. Kepler
Signature of candidate

5/26/2021
Date

Revised 7/10/19

EXHIBIT 45 C
VIOLATIONS #1, #2, #3

RECEIVED
JUL 20 2021
Dept of Business & Industry
NV Real Estate Division - LV MAIL

March 23, 2021

To Whom it May Concern:

My name is Jim Kepler, Sr. I have been a resident of Dayton Valley since 1991. As a Class A PGA Golf Professional for 36 years and present during the inception of Dayton Valley Golf Course I feel I have the dedication necessary to be an effective and knowledgeable asset to the Homeowner's Association Board.

I personally purchased a home on the golf course in 2005 and have watched the Dayton Valley Gated Community grow from 6 homes to over 800 homes. Previously as the General Manager from 1998-2006 and then being rehired in 2018 to manage again, I have worked extensively with the Developers, the HOA and County Officials to make DV a great community to live.

My wife and I have raised six children here and we are committed to the Dayton community. I have established not only business relationships but community relationships with the education system, youth sports, Veterans, Water, Sewer, County Fire Department, Lyon County Public Works, Chamber of Commerce and Community Roots.

I have formed lasting relationships with the Homeowner's on the golf course and in the surrounding community. In December 2020, with the support of Dayton Valley homeowners and outside investors, we completed the purchase of Dayton Valley Golf Course. As such, I have a vested interest in seeing the community continue to flourish.

I also want to assure the board that if there are potential conflicts of interest, I will always recuse myself.

I would appreciate your support for a position on the board.

Sincerely, Jim Kepler, Sr.

July 15, 2021

RECEIVED
JUL 20 2021
Dept of Business & Industry
NV Real Estate Division - LV MAIL

Nevada Real Estate Division
Office of the Ombudsman
Common-Interest Communities and
Condominium Hotels Program
3300 W. Sahara Ave Suite 325
Las Vegas, NV 89102

Joseph Hughes
905 Lakeview Dr
Dayton, NV 89403

Dear Investigator,

Just a brief explanation of what is included in this complaint against four members of the Dayton Valley Community Association and the supporting documents as to avoid redundancy and seeing that certain documents are originals and can be utilized as exhibits for the 3 violations.

Brief summary of supporting evidence and explanation.

To move the election forward there was a ballot package presented to the Board that was to be reviewed. The package had envelopes, ballot (copy included) and candidate disclosure documents, (original included as exhibit). Also supporting is an audio of the meeting on a thumb drive along with a referenced similar type of case Sharath Chandra vs Vistana Condominium Association Case #2019-89.

Also included is an audio recording and the meeting minutes of the January 27, 2021 Board Meeting that will show Director Kreie failing to recuse himself and procede to vote on a matter before the Board to spend membership monies on an investment he holds, (Golf Course via Tour Spec's Management).

It is highly suggested listening to the entire audio of the meeting so one can begin to understand the depth of the problems within the Board of the Community.

This complaint seeks in no way to delay this overdue election of the board of directors any further, but merely to seek relief from a board that has constantly and consistently shown no regard for the basic tenets of NRS 116. We seek for the Ombudsman to uphold the rule of law and restore this community's faith in the protections the statutes are supposed to provide.

Unfortunately this matter requires expidited review as the Annual Meeting and Election Date is 7/22/2021.

Respectfully submitted,

Joseph P. Hughes
Director
Dayton Valley Community Association

This case will close as a duplicate to 2021-696
opened 7/21/21
~~Do resolution report~~

Lyon County

Parcel 029-122-10

Owners

HUGHES, JOSEPH F
1620 YORK ST
SAN FRANCISCO, CA 94110-0000

Parcel Summary

905 LAKEVIEW DR
DAYTON VALLEY, NV
200 Single Family Residence
8.8 Central Lyon Fire District
30
DAYTON VALLEY C C UNIT 8A
029-12.pdf (228kb)
SUB318690



Property Boundaries

Value History

$167,755	$168,483	$162,311	$158,423	$158,351	$162,094	$145,394
$7,274	$0	$0	$0	$0	$0	$0
$135,000	$90,000	$72,000	$44,000	$26,000	$10,429	$10,429
$310,029	$258,483	$234,311	$202,423	$184,351	$172,523	$155,823
$0	$0	$0	$0	$0	$0	$0
$108,510	$90,469	$82,009	$70,848	$64,523	$60,383	$54,538
$0	$0	$0	$0	$0	$0	$0
$0	$0	$0	$0	$0	$0	$0

Document/Transfer/Sales History

Official Record	Date	Type	Vacant/Improved	Deed Value	
474356	2011-02-28	GRANT BARGAIN SALE DEED	Improved	$135,000	Grantor: BANK OF NEW YORK MELLON TR Grantee: HUGHES, JOSEPH F
470509	2011-01-10	TRUSTEES DEED	Improved	$133,200	Grantor: TRAN, THANH THI Grantee: BANK OF NEW YORK MELLON TR
346988	2005-03-15	GRANT BARGAIN SALE DEED	Improved	$270,972	Grantor: LAKEMONT DAYTON HOMES III LLC Grantee: TRAN, THANH THI
320735	2004-05-14	GRANT BARGAIN SALE DEED	Vacant	$0	Grantee: LAKEMONT DAYTON HOMES III LLC
318690	2004-04-20	SUBDIVISION MAP	Vacant	$0	Grantee: DAYTON VALLEY C C UNIT 8A
279806	2002-07-18	SUBDIVISION MAP	Vacant	$0	Grantee: DAYTON VALLEY COUNTRY CLUB 5B
259889	2001-04-19	SUBDIVISION MAP	Vacant	$0	Grantee: DAYTON VALLEY INVESTORS LLC
246341	2000-04-04	GRANT BARGAIN SALE DEED	Vacant	$0	Grantee: DAYTON VALLEY INVESTORS LLC
244533	2000-02-15	GRANT BARGAIN SALE DEED	Vacant	$1,984,050	Grantee: DAYTON VALLEY INVESTORS ET AL
236174	1999-07-08	GRANT BARGAIN SALE DEED	Vacant	$2,000,000	Grantor: COMLAW NO 445 Grantee: DAYTON VALLEY INVESTORS, LLC
232542	1999-04-19	PARCEL MAP	Vacant	$0	Grantee: COMLAW NO 445 LIMITED
217292	1998-04-09	GRANT BARGAIN SALE DEED	Vacant	$0	Grantee: COMLAW NO 445 LIMITED
182901	1995-06-07	PARCEL MAP	Vacant	$0	Grantee: JOHN LAWRENCE (NEVADA) INC
139969	1991-03-05	EASEMENT/RIGHT-OF-WAY DEED	Vacant	$0	Grantee: JOHN LAWRENCE (NEVADA) INC
					Grantee: JOHN

108203	1990-12-10	RELEASE DEFERRED TAX LIEN	Vacant	$0	LAWRENCE (NEVADA) INC
124613	1989-05-24	BOUNDARY ADJUSTMENT MAP	Vacant	$0	
111626	1987-11-17	GREEN BELT APPROVED	Vacant	$0	
105478	1987-02-13	GRANT BARGAIN SALE DEED	Vacant	$0	
102038	1986-09-12	PARCEL MAP	Vacant	$0	
92698	1985-05-15	GREEN BELT APPROVED	Vacant	$0	
90464	1984-12-31	GRANT BARGAIN SALE DEED	Vacant	$0	
90460	1984-12-31	GRANT BARGAIN SALE DEED	Vacant	$0	
90459	1984-12-31	EXECUTORS/ADMINISTRATORS DEED	Vacant	$0	
90279	1984-12-17	ESTATE/DECREE OF DISTRIBUTION	Vacant	$0	

Buildings

Building # 1, Section # 1, RESIDENCE, Single Family Residence

RES	01	1591	$225,175	2004	2004	0.00%	25.50%	74.50%	$167,755

Structural Elements

ROOF	ROOF	0209	Concrete Tile
EW	EXT WALL	0109	Frame, Stucco
HEAT	HEAT	0351	Warmed & Cooled Air
0502	Automatic Appliance Allowance	1.00	
0601	Plumbing Fixtures -#	10.00	
0602	Plumbing Fixtures Rough-ins -#	1.00	
SBFL	SubFloor (RES)	0622	Raised Subfloor (%)
0402	Automatic Floor Cover Allowance	1.00	
0701	Attached Garage	410.00	
0904	Slab Porch with Roof (SF)	48.00	
BED	Bedrooms	3.00	
BTHF	Bath-Full	2.00	

Subareas

GLA	1,591	100%	1,591

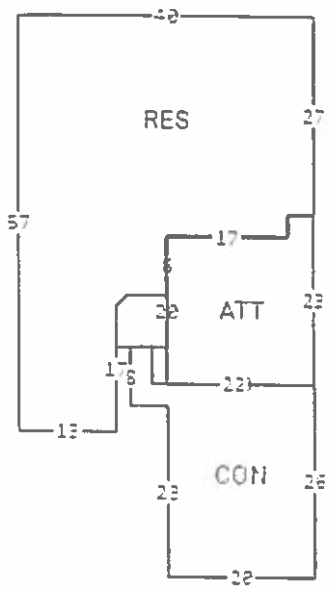

Extra Features

CONCLF	CONCRETE "LOW-FAIR" 420SF 1/19	1.00	$2,213	2004	$2,213	75%	$1,649
FNC LF	FENCE "LOW-FAIR" 200' 1/19	1.00	$5,647	2004	$5,647	75%	$4,207
SPR LF	SPRINKLERS "LOW-FAIR" 1800SF 1/19	1.00	$1,904	2004	$1,904	75%	$1,418

*RCNLD: Replacement Cost New, Less Depreciation

Personal Property

None

Land Lines

 ©2020 GSA, Government Software Assurance Corp

200	Single Family Residence	NR1	1.00	SF	0.14	1.00	$135,000

Disclaimer

All parcel data on this page is for use by the Lyon County Property Appraiser for assessment purposes only. The summary data on this page may not be a complete representation of the parcel or of the improvements thereon. Building information,

including unit counts and number of [redacted]tted units, should be verified with the app[redacted]iate building and planning agencies. Zoning information should b[redacted]rified with the appropriate planning agen[redacted] l parcels are reappraised each year. This is a true and accurate copy of the records of the Lyon County Assessor's Office as of June 29, 2021.

Case 2021-761

Allegation #1

Exhibit #5

Exhibit #5

Board of Director Meeting Minutes

Minutes 2021

- DVCA 2021 Annual Meeting Calendar (pdf)
- DVCA 7_22_2021 Open Meeting minutes draft (pdf)
- DVCA 5_12_2021 Open Meeting minutes draft (pdf)
- DVCA 4_14_2021 Open Meeting minutes draft (pdf)
- DVCA 2_17_2021 Open Meeting minutes DRAFT (doc)
- 01 27 21 Meeting

Case 2021-761

Allegation #1

Exhibit #6

Exhibit #6
Pg 1

DAYTON VALLEY COMMNITY ASSOCIATION

Candidacy Disclosure Statement

RECEIVED MAR 09 2021

s form is provided for Homeowners who wish to run for the Board of Directors (you may nominate yourself). You must return this form to us no later than **March 24, 2021 by 5:00 PM.** The official meeting notice advising the exact date, time and location of the Election meeting will be mailed to all homeowners eligible to vote at a later date. There are seven (7) seats on the Board to fill.

NAME OF NOMINEE: Leandra Carr

ARE YOU A HOMEOWNER IN THE ASSOCIATION STATED ABOVE? YES _____

(YES) NO

Per NRS 116.31034 (5) (a) and (b), please complete the following information regarding your candidacy. Please print your responses.

1.) Each person whose name is placed on the ballot as a candidate for a member of the executive Board must:

(a) Make a good faith effort to disclose any financial, business, professional or personal relationship or interest that would result or would appear to a reasonable person to result in a potential conflict of interest for the candidate if the candidate were to be elected to serve as a member of the executive board; and (Please respond to the statutory requirements cited above).

Because I am actively involved in selling and managing homes in the area, some may think there is a conflict. However, I have above-average experience with ethics and fiduciary responsibility

(b) disclose whether or not the candidate is a member in good standing for the purpose of this paragraph, a candidate shall not be deemed to be in "good standing" if the candidate has any unpaid or past due assessments or construction penalties that are required to be paid to the association. Please answer the question below by placing an X in the correct answer.

I am a member in "Good Standing" with the Association: Yes ✓ **No** ___

2.) Experience: What skills do you feel you have that will contribute to the Board and Association? (Optional):

Have owned my own businesses since 1999
Property manager ~ 18 years (although not association manager)
Network of vendors to suggest to ensure fair bid process

3.) Why do you want to serve on the Board? (Optional):

I live here and want to have a say in the future. I know many of the owners here and understand their concerns. I'm open to listening.

I reside in a unit with, am married to, domestic partners with, or am related by blood, adoption or marriage within the third degree of consanguinity or affinity to another person who is also a member of the executive board or is an officer of the association. ___ yes X **no If yes, please explain on a separate sheet of paper).**

Note: Nothing cited in this disclosure is intended to prevent a potential candidate from running for the board of directors. Further, the Board will not prohibit a candidate from appearing on the ballot for failure to provide a disclosure statement, or for providing an inaccurate one or one with content that is defamatory, libelous or profane. Should a candidate not complete a disclosure statement, or should it contain content believed to be defamatory, libelous or profane, the board will note the fact in a statement to be included with election-related mailings. Further, a complaint may be filed with the Real Estate Division against the candidate who does not comply with the disclosure requirement.

Nominee Signature (Required): Leandra Ca

By signing this form I acknowledge that NRS 116.31034 requires a candidate to make all disclosures required by NRS 116.31034 in writing to the Association with his/her candidacy information, and that the disclosures must be distributed by the Association to each Member of the Association, with the ballot, in the manner established in the Bylaws of the Association, for that candidate to be eligible for office. By signing this form I agree to allow the Association to release any of the information I have supplied on this form.

9874888 8759FCMP-2

Exhibit #6
Pg 2

CANDIDACY DISCLOSURE STATEMENT

(Please Print or Type)

Name Leandra Carr

Address 339 Bayhill Cir (Street) Dayton (City) NV (State) 89403 (Zip)

Are you a unit owner? ..... ☑ Yes ☐ No

(NOTE: NRS 116.3103-4(1) states: Except as otherwise provided in subsection 5 of NRS 116.212, not later than the termination of any period of declarant's control, the units' owners shall elect an executive board of at least three members, all of whom must be units' owners.)

NRS 116.31034 (9) (a) & (b) and NRS 116.31034 (10) (a) & (b) states the following:

9. Each person who is nominated as a candidate for membership on the executive board pursuant to subsection 4 must:
   (a) Make a good faith effort to disclose any financial, business, professional or personal relationship or interest that would result or would appear to a reasonable person to result in a potential conflict of interest for the candidate if the candidate were to be elected to serve as a member of the executive board; and
   (b) Disclose whether the candidate is a member in good standing. For the purposes of this paragraph, a candidate shall not be deemed to be in "good standing" if the candidate has any unpaid and past due assessments or construction penalties that are required to be paid to the association.
10. Except as otherwise provided in subsections 11 and 12, unless a person is appointed by the declarant:
   (a) A person may not be a candidate for or member of the executive board or an officer of the association if:
      (1) The person resides in a unit with, is married to, is domestic partners with, or is related by blood, adoption or marriage within the third degree of consanguinity or affinity to another person who is also a member of the executive board or is an officer of the association;
      (2) The person stands to gain any personal profit or compensation of any kind from a matter before the executive board of the association; or
      (3) The person, the person's spouse or the person's parent or child, by blood, marriage or adoption, performs the duties of a community manager for that association.

   (b) A person may not be a candidate for or member of the executive board of a master association or an officer of that master association if the person, the person's spouse or the person's parent or child, by blood, marriage or adoption, performs the duties of a community manager for:
      (1) That master association; or
      (2) Any association that is subject to the governing documents of that master association.

Please use the following lines to respond to the statutory requirements pursuant to NRS 116.31034 (9) (a)

Attach additional sheets, if necessary: NO CONFLICTS
NO INVESTMENT IN GOLF COURSE

I am a candidate in good standing pursuant to NRS 116.31034(9) (b): ..... ☑ Yes ☐ No

If no, please explain: _____

Please indicate all that apply to your relation to any board members, officer(s) of the association or community managers:

I am:
- ☐ Residing within the same unit as a board member or officer.
- ☐ Married to a board member or officer.
- ☐ Domestic partners with a board member or officer.
- ☑ **None of the above**

Related to a board member by:
- ☐ Blood
- ☐ Adoption
- ☐ Marriage within the third degree of consanguinity
- ☐ Affinity to another person
- ☑ **None of the above**

The candidate must make all disclosures required pursuant to this subsection in writing to the association with his or her candidacy information. Except as otherwise provided in this subsection, the association shall distribute the disclosures, on behalf of the candidate, to each member of the association with the ballot or, in the event ballots are not prepared and mailed pursuant to subsection 5, in the next regular mailing of the association. The association is not obligated to distribute any disclosure pursuant to this subsection if the disclosure contains information that is believed to be defamatory, libelous or profane.

Any additional information provided by the candidate for the executive board is voluntary and is not a requirement under NRS 116.31034.

Leandra Ca — *Signature of candidate*

6-1-2021 — *Date*

RSO

Revised 7/18/19

Exhibit #6
Pg 3

Candidate Name: Leandra Carr

I am running for a seat on this Board because I am a concerned homeowner. What happens in this association affects me and I would like to have a say in the decisions made.

Currently and in the past, I have volunteered and served on several boards. To me, it is important to have differing viewpoints and backgrounds to allow for best decisions to be made and best practices followed.

This community has been my home for nine years. The community and sense of neighborhood is important to me, and I would like to see more homeowners get involved in the HOA. In past years, there was a thriving social committee and lots of events that brought us together. I would like to encourage and work toward a return to that feeling of community.

The Board is responsible for the running of the association, which is a business. As a small business owner, I can appreciate what it takes to run a business. With a background in property management and as a paralegal, I think that my knowledge and experience will be beneficial to the association.

My work requires that I read and digest a lot of legal and technical documents. I am familiar with our bylaws, CC&Rs and NRS 116 that govern how the HOA is to function.

I am happy to listen to homeowner concerns and answer questions as best I can. I walk the neighborhood often and stop to chat with neighbors. My hope is that homeowners feel as though they can come to me with questions and concerns, and that I can be in a position to do something about those concerns.

Finally, I do believe it is important that we, as an association, have a good working relationship with the new golf course owners. While I was offered the opportunity to invest in the golf course last year, I chose not to do so. I made that choice and want to ensure that my association dues and assessments do not end up financially supporting the course. The HOA is a business, and the golf course is a business, and we can be good neighbors without financial entanglements.

Exhibit #6
Pg 4

DAYTON VALLEY COMMNITY ASSOCIATION

Candidacy Disclosure Statement

This form is provided for Homeowners who wish to run for the Board of Directors (you may nominate yourself). You must return this form to us no later than **March 24, 2021 by 5:00 PM.** The official meeting notice advising the exact date, time and location of the Election meeting will be mailed to all homeowners eligible to vote at a later date. There are seven (7) seats on the Board to fill.

NAME OF NOMINEE: Carla Cole

ARE YOU A HOMEOWNER IN THE ASSOCIATION STATED ABOVE? YES NO

Per NRS 116.31034 (5) (a) and (b), please complete the following information regarding your candidacy. Please print your responses.

1.) Each person whose name is placed on the ballot as a candidate for a member of the executive Board must:

(a) Make a good faith effort to disclose any financial, business, professional or personal relationship or interest that would result or would appear to a reasonable person to result in a potential conflict of interest for the candidate if the candidate were to be elected to serve as a member of the executive board; and (Please respond to the statutory requirements cited above).

None

(b) disclose whether or not the candidate is a member in good standing for the purpose of this paragraph, a candidate shall not be deemed to be in "good standing" if the candidate has any unpaid or past due assessments or construction penalties that are required to be paid to the association. Please answer the question below by placing an X in the correct answer.

I am a member in "Good Standing" with the Association: Yes ✓ **No** ___

2.) Experience: What skills do you feel you have that will contribute to the Board and Association? (Optional):

ATHLETIC BUSINESS MGR - DIVISION I University.
5 time member San Joaquin Co Civil Grand Jury, Foreperson and Vice Juror
Retired Law enforcement.
~~Women's Golf Club PRESIDENT~~

3.) Why do you want to serve on the Board? (Optional):

A better understanding of the HOA

I reside in a unit with, am married to, domestic partners with, or am related by blood, adoption or marriage within the third degree of consanguinity or affinity to another person who is also a member of the executive board or is an officer of the association. ____ yes ____ no If yes, please explain on a separate sheet of paper).

Note: Nothing cited in this disclosure is intended to prevent a potential candidate from running for the board of directors. Further, the Board will not prohibit a candidate from appearing on the ballot for failure to provide a disclosure statement, or for providing an inaccurate one or one with content that is defamatory, libelous or profane. Should a candidate not complete a disclosure statement, or should it contain content believed to be defamatory, libelous or profane, the board will note the fact in a statement to be included with election-related mailings. Further, a complaint may be filed with the Real Estate Division against the candidate who does not comply with the disclosure requirement.

Nominee Signature (Required): Carla M Cole

By signing this form I acknowledge that NRS 116.31034 requires a candidate to make all disclosures required by NRS 116.31034 in writing to the Association with his/her candidacy information, and that the disclosures must be distributed by the Association to each Member of the Association, with the ballot, in the manner established in the Bylaws of the Association, for that candidate to be eligible for office. By signing this form I agree to allow the Association to release any of the information I have supplied on this form.

Exhibit #6
Pg 5

CANDIDACY DISCLOSURE STATEMENT

(Please Print or Type)

Name Carla M Cole

Address 653 St. Andrews Dr. Dayton, NV 89403
(Street) (City) (State) (Zip)

Are you a unit owner? ..... ☒ Yes ☐ No

(NOTE: NRS 116.31034(1) states: Except as otherwise provided in subsection 5 of NRS 116.212, not later than the termination of any period of declarant's control, the units' owners shall elect an executive board of at least three members, all of whom must be units' owners.)

NRS 116.31034 (9) (a) & (b) and NRS 116.31034 (10) (a) & (b) states the following:

9. Each person who is nominated as a candidate for membership on the executive board pursuant to subsection 4 must:
   (a) Make a good faith effort to disclose any financial, business, professional or personal relationship or interest that would result or would appear to a reasonable person to result in a potential conflict of interest for the candidate if the candidate were to be elected to serve as a member of the executive board; and
   (b) Disclose whether the candidate is a member in good standing. For the purposes of this paragraph, a candidate shall not be deemed to be in "good standing" if the candidate has any unpaid and past due assessments or construction penalties that are required to be paid to the association.
10. Except as otherwise provided in subsections 11 and 12, unless a person is appointed by the declarant:
   (a) A person may not be a candidate for or member of the executive board or an officer of the association if:
      (1) The person resides in a unit with, is married to, is domestic partners with, or is related by blood, adoption or marriage within the third degree of consanguinity or affinity to another person who is also a member of the executive board or is an officer of the association;
      (2) The person stands to gain any personal profit or compensation of any kind from a matter before the executive board of the association; or
      (3) The person, the person's spouse or the person's parent or child, by blood, marriage or adoption, performs the duties of a community manager for that association.

   (b) A person may not be a candidate for or member of the executive board of a master association or an officer of that master association if the person, the person's spouse or the person's parent or child, by blood, marriage or adoption, performs the duties of a community manager for:
      (1) That master association; or
      (2) Any association that is subject to the governing documents of that master association.

Please use the following lines to respond to the statutory requirements pursuant to NRS 116.31034 (9) (a)

Attach additional sheets, if necessary: _____

I am a candidate in good standing pursuant to NRS 116.31034(9) (b): ..... ☒ Yes ☐ No

If no, please explain: _____

Please indicate all that apply to your relation to any board members, officer(s) of the association or community managers:

I am:
- ☐ Residing within the same unit as a board member or officer.
- ☐ Married to a board member or officer.
- ☐ Domestic partners with a board member or officer.
- ☒ **None of the above**

Related to a board member by:
- ☐ Blood
- ☐ Adoption
- ☐ Marriage within the third degree of consanguinity
- ☐ Affinity to another person
- ☒ **None of the above**

The candidate must make all disclosures required pursuant to this subsection in writing to the association with his or her candidacy information. Except as otherwise provided in this subsection, the association shall distribute the disclosures, on behalf of the candidate, to each member of the association with the ballot or, in the event ballots are not prepared and mailed pursuant to subsection 5, in the next regular mailing of the association. The association is not obligated to distribute any disclosure pursuant to this subsection if the disclosure contains information that is believed to be defamatory, libelous or profane.

Any additional information provided by the candidate for the executive board is voluntary and is not a requirement under NRS 116.31034.

Carla M Cole
Signature of candidate

5/27/2021
Date

CICC0030

Exhibit #6
Pg 6

March 19, 2021

Dayton Home Owners Association Membership:

My name is Carla Cole and I am running for a director's position within the Dayton Valley Community Association. My husband and I moved to Dayton, Nevada in November of 2017 from Lodi, California.

I am very much interested in our HOA management and goals and I believe my experiences will be beneficial. I have continually strived to exceed the standards of the positions I have held.

- Currently, I am retired and the President of Dayton Valley Women's Golf Club.
- 1991-2007- Lodi Police Department, Lodi, Calf. Dispatcher/Jailer, Field Evidence Tech, Crime Preventions Officer, and member of the Critical Incident Negotiation Team.
- 1977-1991- Athletic Business Manager, University of the Pacific in Stockton, Calif. I managed the UOP Athletic Department's Business Operations, including the Athletic Ticket Office, and game-day operations of all major athletic events from 1985-1991.

After retirement, I was honored to be nominated to serve on the San Joaquin County Civil Grand Jury where I served for 5 years. During my tenure, I was chosen to the position of Grand Jury Foreperson and Vice Foreperson by the Presiding Judge of the San Joaquin County Superior Court. I have realized that I enjoyed making a difference in my community as I will for my HOA. I am honest, I know the meaning of confidentiality, and I am not afraid to ask difficult questions. I am a person that can work with others that may not be in agreement and defend my position.

Thank you

Carla Cole

St. Andrews Drive

Exhibit H 6
Pg 7

DAYTON VALLEY COMMNITY ASSOCIATION

RECEIVED MAR 08 2021

Candidacy Disclosure Statement

s form is provided for Homeowners who wish to run for the Board of Directors (you may nominate yourself). You must return this form to us no later than **March 24, 2021 by 5:00 PM.** The official meeting notice advising the exact date, time and location of the Election meeting will be mailed to all homeowners eligible to vote at a later date. There are seven (7) seats on the Board to fill.

NAME OF NOMINEE: Paula Darragh

ARE YOU A HOMEOWNER IN THE ASSOCIATION STATED ABOVE? yes ____

(YES) NO

Per NRS 116.31034 (5) (a) and (b), please complete the following information regarding your candidacy. Please print your responses.

1.) Each person whose name is placed on the ballot as a candidate for a member of the executive Board must:

(a) Make a good faith effort to disclose any financial, business, professional or personal relationship or interest that would result or would appear to a reasonable person to result in a potential conflict of interest for the candidate if the candidate were to be elected to serve as a member of the executive board; and (Please respond to the statutory requirements cited above).

none

(b) disclose whether or not the candidate is a member in good standing for the purpose of this paragraph, a candidate shall not be deemed to be in "good standing" if the candidate has any unpaid or past due assessments or construction penalties that are required to be paid to the association. Please answer the question below by placing an X in the correct answer.

I am a member in "Good Standing" with the Association: Yes X **No** ___

2.) Experience: What skills do you feel you have that will contribute to the Board and Association? (Optional):

Budget management, Prior experience on this board.

3.) Why do you want to serve on the Board? (Optional):

It is important that we (the residents) participate in the governing of our association.

I reside in a unit with, am married to, domestic partners with, or am related by blood, adoption or marriage within the third degree of consanguinity or affinity to another person who is also a member of the executive board or is an officer of the association. ___ **yes** X **no If yes, please explain on a separate sheet of paper).**

Note: Nothing cited in this disclosure is intended to prevent a potential candidate from running for the board of directors. Further, the Board will not prohibit a candidate from appearing on the ballot for failure to provide a disclosure statement, or for providing an inaccurate one or one with content that is defamatory, libelous or profane. Should a candidate not complete a disclosure statement, or should it contain content believed to be defamatory, libelous or profane, the board will note the fact in a statement to be included with election-related mailings. Further, a complaint may be filed with the Real Estate Division against the candidate who does not comply with the disclosure requirement.

Nominee Signature (Required): Paula M Darragh

By signing this form I acknowledge that NRS 116.31034 requires a candidate to make all disclosures required by NRS 116.31034 in writing to the Association with his/her candidacy information, and that the disclosures must be distributed by the Association to each Member of the Association, with the ballot, in the manner established in the Bylaws of the Association, for that candidate to be eligible for office. By signing this form I agree to allow the Association to release any of the information I have supplied on this form.

CICC0032

Exhibit #6
Pg 8

CANDIDACY DISCLOSURE STATEMENT

(Please Print or Type)

Name Paula Darragh

Address 211 Fortrush Ct (Street) Dayton (City) NV (State) 89403 (Zip)

Are you a unit owner? ..... ☒ Yes ☐ No

(NOTE: NRS 116.31034(1) states: Except as otherwise provided in subsection 5 of NRS 116.212, not later than the termination of any period of declarant's control, the units' owners shall elect an executive board of at least three members, all of whom must be units' owners.)

NRS 116.31034 (9) (a) & (b) and NRS 116.31034 (10) (a) & (b) states the following:

9. Each person who is nominated as a candidate for membership on the executive board pursuant to subsection 4 must:
   (a) Make a good faith effort to disclose any financial, business, professional or personal relationship or interest that would result or would appear to a reasonable person to result in a potential conflict of interest for the candidate if the candidate were to be elected to serve as a member of the executive board; and
   (b) Disclose whether the candidate is a member in good standing. For the purposes of this paragraph, a candidate shall not be deemed to be in "good standing" if the candidate has any unpaid and past due assessments or construction penalties that are required to be paid to the association.
10. Except as otherwise provided in subsections 11 and 12, unless a person is appointed by the declarant:
   (a) A person may not be a candidate for or member of the executive board or an officer of the association if:
      (1) The person resides in a unit with, is married to, is domestic partners with, or is related by blood, adoption or marriage within the third degree of consanguinity or affinity to another person who is also a member of the executive board or is an officer of the association;
      (2) The person stands to gain any personal profit or compensation of any kind from a matter before the executive board of the association; or
      (3) The person, the person's spouse or the person's parent or child, by blood, marriage or adoption, performs the duties of a community manager for that association.

   (b) A person may not be a candidate for or member of the executive board of a master association or an officer of that master association if the person, the person's spouse or the person's parent or child, by blood, marriage or adoption, performs the duties of a community manager for:
      (1) That master association; or
      (2) Any association that is subject to the governing documents of that master association.

Please use the following lines to respond to the statutory requirements pursuant to NRS 116.31034 (9) (a)

Attach additional sheets, if necessary: NO conflicts

I am a candidate in good standing pursuant to NRS 116.31034(9) (b): ..... ☒ Yes ☐ No

If no, please explain: _____

Please indicate all that apply to your relation to any board members, officer(s) of the association or community managers:

I am:

- ☐ Residing within the same unit as a board member or officer.
- ☐ Married to a board member or officer.
- ☐ Domestic partners with a board member or officer.
- ☒ **None of the above**

Related to a board member by:

- ☐ Blood
- ☐ Adoption
- ☐ Marriage within the third degree of consanguinity
- ☐ Affinity to another person
- ☒ **None of the above**

The candidate must make all disclosures required pursuant to this subsection in writing to the association with his or her candidacy information. Except as otherwise provided in this subsection, the association shall distribute the disclosures, on behalf of the candidate, to each member of the association with the ballot or, in the event ballots are not prepared and mailed pursuant to subsection 5, in the next regular mailing of the association. The association is not obligated to distribute any disclosure pursuant to this subsection if the disclosure contains information that is believed to be defamatory, libelous or profane.

Any additional information provided by the candidate for the executive board is voluntary and is not a requirement under NRS 116.31034.

Paula M Darragh
Signature of candidate

5/26/2021
Date

Revised 7/18/19

CICC0033

Exhibit #6
Pg 9

RECEIVED MAR 23 2021

My name is Paula Darragh and I am currently a Director of your HOA, the Dayton Valley Community Association.

I started my involvement in our HOA by volunteering to help revamp our CC&Rs because I felt it was important to understand the special rules unique to our community. This was completed a long process that was completed in 2010. I have served on the Board of Directors off and on since 2012.

To keep this a great community to live in requires commitment from your Board of Directors. This year there are more candidates for the board than there are open seats so we will have an election for the first time in several years. I am asking for your vote and I would like you to consider voting for these other candidates who are current board members: Dennis Drury, Sandy Mass, and Doug Kreie.

Thank you,

Paula Darragh, Director

Dayton Valley Community Association

Exhibit #6
Pg 10

9874888-131-3-4

DAYTON VALLEY COMMNITY ASSOCIATION

Candidacy Disclosure Statement

s form is provided for Homeowners who wish to run for the Board of Directors (you may nominate yourself). You must return this form to us no later than **March 24, 2021 by 5:00 PM.** The official meeting notice advising the exact date, time and location of the Election meeting will be mailed to all homeowners eligible to vote at a later date. There are seven (7) seats on the Board to fill.

NAME OF NOMINEE: DENNIS DRURY

ARE YOU A HOMEOWNER IN THE ASSOCIATION STATED ABOVE? YES NO

Per NRS 116.31034 (5) (a) and (b), please complete the following information regarding your candidacy. Please print your responses.

1.) Each person whose name is placed on the ballot as a candidate for a member of the executive Board must:

(a) Make a good faith effort to disclose any financial, business, professional or personal relationship or interest that would result or would appear to a reasonable person to result in a potential conflict of interest for the candidate if the candidate were to be elected to serve as a member of the executive board; and (Please respond to the statutory requirements cited above).

I HAVE NONE.

(b) disclose whether or not the candidate is a member in good standing for the purpose of this paragraph, a candidate shall not be deemed to be in "good standing" if the candidate has any unpaid or past due assessments or construction penalties that are required to be paid to the association. Please answer the question below by placing an X in the correct answer.

I am a member in "Good Standing" with the Association: Yes X **No** ___

2.) Experience: What skills do you feel you have that will contribute to the Board and Association? (Optional):

CURRENT BOARD PRESIDENT

3.) Why do you want to serve on the Board? (Optional):

TO KEEP THIS COMMUNITY A GREAT PLACE TO LIVE.

I reside in a unit with, am married to, domestic partners with, or am related by blood, adoption or marriage within the third degree of consanguinity or affinity to another person who is also a member of the executive board or is an officer of the association. ___ **yes** X **no If yes, please explain on a separate sheet of paper).**

Note: Nothing cited in this disclosure is intended to prevent a potential candidate from running for the board of directors. Further, the Board will not prohibit a candidate from appearing on the ballot for failure to provide a disclosure statement, or for providing an inaccurate one or one with content that is defamatory, libelous or profane. Should a candidate not complete a disclosure statement, or should it contain content believed to be defamatory, libelous or profane, the board will note the fact in a statement to be included with election-related mailings. Further, a complaint may be filed with the Real Estate Division against the candidate who does not comply with the disclosure requirement.

Nominee Signature (Required): _____

By signing this form I acknowledge that NRS 116.31034 requires a candidate to make all disclosures required by NRS 116.31034 in writing to the Association with his/her candidacy information, and that the disclosures must be distributed by the Association to each Member of the Association, with the ballot, in the manner established in the Bylaws of the Association, for that candidate to be eligible for office. By signing this form I agree to allow the Association to release any of the information I have supplied on this form.

9874888 8759FCMP-2

Exhibit #6
Pg 11

CANDIDACY DISCLOSURE STATEMENT

(Please Print or Type)

Name DENNIS DRURY

Address 662 ST ANDREWS DAYTON NV 89403
(Street) (City) (State) (Zip)

Are you a unit owner? ..... ☒ Yes ☐ No

(NOTE: NRS 116.31034(1) states: Except as otherwise provided in subsection 5 of NRS 116.212, not later than the termination of any period of declarant's control, the units' owners shall elect an executive board of at least three members, all of whom must be units' owners.)

NRS 116.31034 (9) (a) & (b) and NRS 116.31034 (10) (a) & (b) states the following:

9. Each person who is nominated as a candidate for membership on the executive board pursuant to subsection 4 must:
   (a) Make a good faith effort to disclose any financial, business, professional or personal relationship or interest that would result or would appear to a reasonable person to result in a potential conflict of interest for the candidate if the candidate were to be elected to serve as a member of the executive board; and
   (b) Disclose whether the candidate is a member in good standing. For the purposes of this paragraph, a candidate shall not be deemed to be in "good standing" if the candidate has any unpaid and past due assessments or construction penalties that are required to be paid to the association.
10. Except as otherwise provided in subsections 11 and 12, unless a person is appointed by the declarant:
   (a) A person may not be a candidate for or member of the executive board or an officer of the association if:
      (1) The person resides in a unit with, is married to, is domestic partners with, or is related by blood, adoption or marriage within the third degree of consanguinity or affinity to another person who is also a member of the executive board or is an officer of the association;
      (2) The person stands to gain any personal profit or compensation of any kind from a matter before the executive board of the association; or
      (3) The person, the person's spouse or the person's parent or child, by blood, marriage or adoption, performs the duties of a community manager for that association.

   (b) A person may not be a candidate for or member of the executive board of a master association or an officer of that master association if the person, the person's spouse or the person's parent or child, by blood, marriage or adoption, performs the duties of a community manager for:
      (1) That master association; or
      (2) Any association that is subject to the governing documents of that master association.

Please use the following lines to respond to the statutory requirements pursuant to NRS 116.31034 (9) (a)

Attach additional sheets, if necessary: I HAVE NO CONFLICTS

I am a candidate in good standing pursuant to NRS 116.31034(9) (b): ..... ☒ Yes ☐ No

If no, please explain: _____

Please indicate all that apply to your relation to any board members, officer(s) of the association or community managers:

I am:

- ☐ Residing within the same unit as a board member or officer.
- ☐ Married to a board member or officer.
- ☐ Domestic partners with a board member or officer.
- ☒ **None of the above**

Related to a board member by:

- ☐ Blood
- ☐ Adoption
- ☐ Marriage within the third degree of consanguinity
- ☐ Affinity to another person
- ☒ **None of the above**

The candidate must make all disclosures required pursuant to this subsection in writing to the association with his or her candidacy information. Except as otherwise provided in this subsection, the association shall distribute the disclosures, on behalf of the candidate, to each member of the association with the ballot or, in the event ballots are not prepared and mailed pursuant to subsection 5, in the next regular mailing of the association. The association is not obligated to distribute any disclosure pursuant to this subsection if the disclosure contains information that is believed to be defamatory, libelous or profane.

Any additional information provided by the candidate for the executive board is voluntary and is not a requirement under NRS 116.31034.

Signature of candidate

25 MAY 2021
Date

Exhibit #6
Pg 12

My name is Dennis Drury and I am currently the President of the Dayton Valley Community Association, your HOA. For the first time in quite a while there are now more candidates running than there are open seats. Because of that we will be having an election so that you, the owners, can vote to decide who will manage our community going forward. I, and several other current members of the Board of Directors, are running for re-election. In addition there are several others running as well. I would like to take this opportunity to present the case of why you should vote for me as well as some other candidates I will name below.

When I first volunteered to be a member of the board, I sat down with then president and vice president Mike Becker and Bruce Thiel for an interview. They asked why I wanted to join the board and I replied that I wanted to do everything I could to keep this a great place to live. I suppose I made a good impression since they nominated me for the then open board seat. It wasn't too long afterwards that Mike needed to step down since he was moving to Texas. The board at that time then nominated me as president and the vote was unanimous. I've been serving as your president ever since.

I'm sure you're aware the past 12 months have been pretty rough on a great many people. Some of them are our neighbors. Because of the pandemic the Board of Directors voted to grant all owners an assessment holiday. In fact, we actually did that twice. I, and the other directors, hope you were able to put that extra money to good use. We were able to do this because we had extra money in the operating account so it made sense to use it proactively given the circumstances. Even with that drop in revenue we were able to finish out the year in a financially sound state.

This year appears to be going even better. The way it's looking right now we will most likely have enough extra in the operating account to enable us to transfer sufficient funds into the reserve account to bring that up to where it is 100% funded. The reason for this is due to the fiscal responsibility exercised by your current board. We are able to take care of all our required maintenance requirements and still have money left over. In 2019 we resurfaced all the roads within the community. This past year we replaced the rear perimeter fence. Both these projects were called out to be performed in the reserve study and both projects were completed under the reserve study budget.

Remember, this is your community and the best way to make sure it continues to be the wonderful place to live is to vote for the candidates you feel can do the best job. I'm asking for your vote and I would also like you to consider voting for these other candidates: Paula Darragh, Sandy Mass, and Doug Kreie are current board members whom I believe have earned your trust and thus your votes. I also endorse Carla Cole, Ted Bader and Jim Kepler. So when you mark up your ballots please keep these names in mind. I also know there are several other of our neighbors running so please review their candidate statements carefully when casting your votes.

Thank you for your time and your vote.
Dennis Drury, President
Dayton Valley Community Association

Exhibit #6
Pg 13

DAYTON VALLEY COMMNITY ASSOCIATION

Candidacy Disclosure Statement

This form is provided for Homeowners who wish to run for the Board of Directors (you may nominate yourself). You must return this form to us no later than **March 24, 2021 by 5:00 PM.** The official meeting notice advising the exact date, time and location of the Election meeting will be mailed to all homeowners eligible to vote at a later date. There are seven (7) seats on the Board to fill.

NAME OF NOMINEE: Mary W.Farias

ARE YOU A HOMEOWNER IN THE ASSOCIATION STATED ABOVE? Yes

☒ **YES** ☐ **NO**

Per NRS 116.31034 (5) (a) and (b), please complete the following information regarding your candidacy. Please print your responses.

1.) Each person whose name is placed on the ballot as a candidate for a member of the executive Board must:

(a) Make a good faith effort to disclose any financial, business, professional or personal relationship or interest that would result or would appear to a reasonable person to result in a potential conflict of interest for the candidate if the candidate were to be elected to serve as a member of the executive board; and (Please respond to the statutory requirements cited above).

I do not have any financial, business, professional or personal relationship or interest that would appear as a conflict of interest in any way.

(b) disclose whether or not the candidate is a member in good standing for the purpose of this paragraph, a candidate shall not be deemed to be in "good standing" if the candidate has any unpaid or past due assessments or construction penalties that are required to be paid to the association. Please answer the question below by placing an X in the correct answer.

I am a member in "Good Standing" with the Association: Yes X **No** ___

2.) Experience: What skills do you feel you have that will contribute to the Board and Association? (Optional):

I am a financial accountant with over forty years experience in corporate, non-profit, and association environments. I bring solid analytical skills and financial management skills to the Board. I have prepared/presented tax returns, SEC reports, Board reports, consolidated financial statements, and Treasurer reports. I am a team player, but think for myself.

3.) Why do you want to serve on the Board? (Optional):

As a resident of this community, I am very interested in maintaining the quality of life we enjoy here. It is very important to me that our community regulations and rules are upheld in a manner that both listens and responds to the changing needs of our community and our environment.

I reside in a unit with, am married to, domestic partners with, or am related by blood, adoption or marriage within the third degree of consanguinity or affinity to another person who is also a member of the executive board or is an officer of the association. ___ yes ✓ **no If yes, please explain on a separate sheet of paper).**

Note: Nothing cited in this disclosure is intended to prevent a potential candidate from running for the board of directors. Further, the Board will not prohibit a candidate from appearing on the ballot for failure to provide a disclosure statement, or for providing an inaccurate one or one with content that is defamatory, libelous or profane. Should a candidate not complete a disclosure statement, or should it contain content believed to be defamatory, libelous or profane, the board will note the fact in a statement to be included with election-related mailings. Further, a complaint may be filed with the Real Estate Division against the candidate who does not comply with the disclosure requirement.

Nominee Signature (Required): Mary W Farias

By signing this form I acknowledge that NRS 116.31034 requires a candidate to make all disclosures required by NRS 116.31034 in writing to the Association with his/her candidacy information, and that the disclosures must be distributed by the Association to each Member of the Association, with the ballot, in the manner established in the Bylaws of the Association, for that candidate to be eligible for office. By signing this form I agree to allow the Association to release any of the information I have supplied on this form.

Exhibit #6
Pg 14

CANDIDACY DISCLOSURE STATEMENT

(Please Print or Type)

Name MARY FARIAS

Address 755 GRAYHAWK DR (Street) DAYTON (City) NV (State) 89403 (Zip)

Are you a unit owner? ..... ☒ Yes ☐ No

(NOTE: NRS 116.31034(1) states: Except as otherwise provided in subsection 5 of NRS 116.212, not later than the termination of any period of declarant's control, the units' owners shall elect an executive board of at least three members, all of whom must be units' owners.)

NRS 116.31034 (9) (a) & (b) and NRS 116.31034 (10) (a) & (b) states the following:

9. Each person who is nominated as a candidate for membership on the executive board pursuant to subsection 4 must:
   (a) Make a good faith effort to disclose any financial, business, professional or personal relationship or interest that would result or would appear to a reasonable person to result in a potential conflict of interest for the candidate if the candidate were to be elected to serve as a member of the executive board; and
   (b) Disclose whether the candidate is a member in good standing. For the purposes of this paragraph, a candidate shall not be deemed to be in "good standing" if the candidate has any unpaid and past due assessments or construction penalties that are required to be paid to the association.
10. Except as otherwise provided in subsections 11 and 12, unless a person is appointed by the declarant:
   (a) A person may not be a candidate for or member of the executive board or an officer of the association if:
      (1) The person resides in a unit with, is married to, is domestic partners with, or is related by blood, adoption or marriage within the third degree of consanguinity or affinity to another person who is also a member of the executive board or is an officer of the association;
      (2) The person stands to gain any personal profit or compensation of any kind from a matter before the executive board of the association; or
      (3) The person, the person's spouse or the person's parent or child, by blood, marriage or adoption, performs the duties of a community manager for that association.

   (b) A person may not be a candidate for or member of the executive board of a master association or an officer of that master association if the person, the person's spouse or the person's parent or child, by blood, marriage or adoption, performs the duties of a community manager for:
      (1) That master association; or
      (2) Any association that is subject to the governing documents of that master association.

Please use the following lines to respond to the statutory requirements pursuant to NRS 116.31034 (9) (a)

Attach additional sheets, if necessary: I have No financial, business, professional or personal relationship or interest that could result in a conflict of interest.

I am a candidate in good standing pursuant to NRS 116.31034(9) (b): ..... ☒ Yes ☐ No

If no, please explain: _____

Please indicate all that apply to your relation to any board members, officer(s) of the association or community managers:

I am:

- ☐ Residing within the same unit as a board member or officer.
- ☐ Married to a board member or officer.
- ☐ Domestic partners with a board member or officer.
- ☒ **None of the above**

Related to a board member by:

- ☐ Blood
- ☐ Adoption
- ☐ Marriage within the third degree of consanguinity
- ☐ Affinity to another person
- ☒ **None of the above**

The candidate must make all disclosures required pursuant to this subsection in writing to the association with his or her candidacy information. Except as otherwise provided in this subsection, the association shall distribute the disclosures, on behalf of the candidate, to each member of the association with the ballot or, in the event ballots are not prepared and mailed pursuant to subsection 5, in the next regular mailing of the association. The association is not obligated to distribute any disclosure pursuant to this subsection if the disclosure contains information that is believed to be defamatory, libelous or profane.

Any additional information provided by the candidate for the executive board is voluntary and is not a requirement under NRS 116.31034.

Mary M Farias
Signature of candidate

May 27, 2021
Date

Revised 7/18/19

CICC0039

Exhibit #6
Pg 15

MARY W. FARIAS
NO STATEMENT
SUBMITTED

Exhibit #6
Pg 16

DAYTON VALLEY COMMNITY ASSOCIATION

Candidacy Disclosure Statement

This form is provided for Homeowners who wish to run for the Board of Directors (you may nominate yourself). You must return this form to us no later than **March 24, 2021 by 5:00 PM.** The official meeting notice advising the exact date, time and location of the Election meeting will be mailed to all homeowners eligible to vote at a later date. There are seven (7) seats on the Board to fill.

NAME OF NOMINEE: Steven Gellischafer

ARE YOU A HOMEOWNER IN THE ASSOCIATION STATED ABOVE? yes ____

(YES) NO

Per NRS 116.31034 (5) (a) and (b), please complete the following information regarding your candidacy. Please print your responses.

1.) Each person whose name is placed on the ballot as a candidate for a member of the executive Board must:

(a) Make a good faith effort to disclose any financial, business, professional or personal relationship or interest that would result or would appear to a reasonable person to result in a potential conflict of interest for the candidate if the candidate were to be elected to serve as a member of the executive board; and (Please respond to the statutory requirements cited above).

I have no financial, business, professional or personal relationship/ interest that would be a potential conflict of interest

(b) disclose whether or not the candidate is a member in good standing for the purpose of this paragraph, a candidate shall not be deemed to be in "good standing" if the candidate has any unpaid or past due assessments or construction penalties that are required to be paid to the association. Please answer the question below by placing an X in the correct answer.

I am a member in "Good Standing" with the Association: Yes X **No** ___

2.) Experience: What skills do you feel you have that will contribute to the Board and Association? (Optional):

See attached Candidacy Experience Statement

3.) Why do you want to serve on the Board? (Optional):

I have serious concerns with where the HOA's finances are headed under current leadership, and the lack of transparency the board has operated under of late. Those need to change.

I reside in a unit with, am married to, domestic partners with, or am related by blood, adoption or marriage within the third degree of consanguinity or affinity to another person who is also a member of the executive board or is an officer of the association. ___ **yes** X **no If yes, please explain on a separate sheet of paper).**

Note: Nothing cited in this disclosure is intended to prevent a potential candidate from running for the board of directors. Further, the Board will not prohibit a candidate from appearing on the ballot for failure to provide a disclosure statement, or for providing an inaccurate one or one with content that is defamatory, libelous or profane. Should a candidate not complete a disclosure statement, or should it contain content believed to be defamatory, libelous or profane, the board will note the fact in a statement to be included with election-related mailings. Further, a complaint may be filed with the Real Estate Division against the candidate who does not comply with the disclosure requirement.

Nominee Signature (Required): _____

By signing this form I acknowledge that NRS 116.31034 requires a candidate to make all disclosures required by NRS 116.31034 in writing to the Association with his/her candidacy information, and that the disclosures must be distributed by the Association to each Member of the Association, with the ballot, in the manner established in the Bylaws of the Association, for that candidate to be eligible for office. By signing this form I agree to allow the Association to release any of the information I have supplied on this form.

Exhibit #6
Pg 17

CANDIDACY DISCLOSURE STATEMENT

Name Steven Lee Gallisdorfer (Please Print or Type)

Address 518 Stonehaven Ct, Dayton, NV 89403
(Street) (City) (State) (Zip)

Are you a unit owner? ..... ☒ Yes ☐ No

(NOTE: NRS 116.31034(1) states: Except as otherwise provided in subsection 5 of NRS 116.212, not later than the termination of any period of declarant's control, the units' owners shall elect an executive board of at least three members, all of whom must be units' owners.)

NRS 116.31034 (9) (a) & (b) and NRS 116.31034 (10) (a) & (b) states the following:

9. Each person who is nominated as a candidate for membership on the executive board pursuant to subsection 4 must:
   (a) Make a good faith effort to disclose any financial, business, professional or personal relationship or interest that would result or would appear to a reasonable person to result in a potential conflict of interest for the candidate if the candidate were to be elected to serve as a member of the executive board; and
   (b) Disclose whether the candidate is a member in good standing. For the purposes of this paragraph, a candidate shall not be deemed to be in "good standing" if the candidate has any unpaid and past due assessments or construction penalties that are required to be paid to the association.
10. Except as otherwise provided in subsections 11 and 12, unless a person is appointed by the declarant:
   (a) A person may not be a candidate for or member of the executive board or an officer of the association if:
      (1) The person resides in a unit with, is married to, is domestic partners with, or is related by blood, adoption or marriage within the third degree of consanguinity or affinity to another person who is also a member of the executive board or is an officer of the association;
      (2) The person stands to gain any personal profit or compensation of any kind from a matter before the executive board of the association; or
      (3) The person, the person's spouse or the person's parent or child, by blood, marriage or adoption, performs the duties of a community manager for that association.

   (b) A person may not be a candidate for or member of the executive board of a master association or an officer of that master association if the person, the person's spouse or the person's parent or child, by blood, marriage or adoption, performs the duties of a community manager for:
      (1) That master association; or
      (2) Any association that is subject to the governing documents of that master association.

Please use the following lines to respond to the statutory requirements pursuant to NRS 116.31034 (9) (a)

Attach additional sheets, if necessary: I have no financial, business, profession or personal relationship or interest that conflict with me serving on the Board.

I am a candidate in good standing pursuant to NRS 116.31034(9) (b): ..... ☒ Yes ☐ No

If no, please explain: I have never been fined or assessed, nor late on my dues

Please indicate all that apply to your relation to any board members, officer(s) of the association or community managers:

I am:
- ☐ Residing within the same unit as a board member or officer.
- ☐ Married to a board member or officer.
- ☐ Domestic partners with a board member or officer.
- ☒ **None of the above**

Related to a board member by:
- ☐ Blood
- ☐ Adoption
- ☐ Marriage within the third degree of consanguinity
- ☐ Affinity to another person
- ☒ **None of the above**

The candidate must make all disclosures required pursuant to this subsection in writing to the association with his or her candidacy information. Except as otherwise provided in this subsection, the association shall distribute the disclosures, on behalf of the candidate, to each member of the association with the ballot or, in the event ballots are not prepared and mailed pursuant to subsection 5, in the next regular mailing of the association. The association is not obligated to distribute any disclosure pursuant to this subsection if the disclosure contains information that is believed to be defamatory, libelous or profane.

Any additional information provided by the candidate for the executive board is voluntary and is not a requirement under NRS 116.31034.

Signature of candidate

May 27, 2021
Date

Revised 7/18/19

850

Exhibit # 6
Pg 18

Candidacy Experience Statement

March 18, 2021

My background and education is in Inorganic Chemistry but for almost 40 years I was a Territory Manager for 2 different firms, and for the better part of two years now I have been retired. For the first 23 years I was the West Coast Territory Manager for the world's largest distributor of fine art materials. During my tenure there I was promoted to Regional Director, responsible for all activities in 32 central states, managing 14 direct reports, managing sales operations and front-office personnel in one of three national distribution centers and sales to the company's top 2 direct accounts.

I accepted an offer from their largest supplier to come work for them, which worked well for both companies. This new company was not just the largest manufacturer of its kind, but larger than their next 6 competitors combined, making them wear a big target on their backs. They were a multinational firm with 14 manufacturing plants in 9 different countries around the globe, and sales in over 90 countries. I finished my career with them after almost 17 years. I was responsible for all sales activity in 9 western states and 3 Canadian provinces. This included independent retail stores, regional chain stores, national chain stores, Amazon and several distributors (as well as their sales forces.) Our North American budget when I retired was well over $130 million.

I also served on a Permanent Road Division (PRD) committee for 9 years in Nevada County, California, becoming the chairman. A PRD is kind of like an HOA in that everyone who lives in it pays an annual assessment to maintain the roads, as directed by the PRD Committee. It's a rather thankless job, as most people want the roads graded better, or paved, or the dust abated, or something, all while not paying more than the approximate $400 annually already being paid. This PRD had 14 miles of roads in it, of which only 0.9 miles was paved when I took this position. There were 470 properties in the PRD ranging up to 3600 acres each.

My ranch was 4.5 miles of dirt roads just to get to the mailboxes. Working with the state and county, I secured a grant to pave 4.1 miles of the main stem, with the state paying for 90% of the materials, and the county paying for another 5% plus 75% of the labor. The landowners in the PRD would need to pay the balance, which was about $2600 per assessed lot, so a stretch to get 50% to agree to. I convinced the county to 'take payments' in the form of splitting it up over 3 years and including it as an assessment on our tax bills. It was a hard sell to the landowners, but I was successful in getting the vote, and the main stem road paved. So I do know how to work well in situations like our board requires, even when it will make some people not like you.

Though experience I have gained a wide variety of interpersonal skills and financial budgeting skills, and the ability to work with a wide variety of personalities. My experience and background would serve the HOA well. I look forward to moving the HOA forward, and bringing transparency to the boards actions. I believe that only when absolutely required should decisions be made in executive session, and everything else should be in full public view.

X _____

Steven Gallisdorfer

Exhibit 46
Pg 19

DAYTON VALLEY COMMNITY ASSOCIATION

Candidacy Disclosure Statement

RECEIVED MAR 22 2021

This form is provided for Homeowners who wish to run for the Board of Directors (you may nominate yourself). You must return this form to us no later than **March 24, 2021 by 5:00 PM.** The official meeting notice advising the exact date, time and location of the Election meeting will be mailed to all homeowners eligible to vote at a later date. There are seven (7) seats on the Board to fill.

NAME OF NOMINEE: Joseph Hughes

ARE YOU A HOMEOWNER IN THE ASSOCIATION STATED ABOVE? YES _____ _____

(YES) NO

Per NRS 116.31034 (5) (a) and (b), please complete the following information regarding your candidacy. Please print your responses.

1.) Each person whose name is placed on the ballot as a candidate for a member of the executive Board must:

(a) Make a good faith effort to disclose any financial, business, professional or personal relationship or interest that would result or would appear to a reasonable person to result in a potential conflict of interest for the candidate if the candidate were to be elected to serve as a member of the executive board; and (Please respond to the statutory requirements cited above).

No conflicts of interest.

(b) disclose whether or not the candidate is a member in good standing for the purpose of this paragraph, a candidate shall not be deemed to be in "good standing" if the candidate has any unpaid or past due assessments or construction penalties that are required to be paid to the association. Please answer the question below by placing an X in the correct answer.

I am a member in "Good Standing" with the Association: Yes X **No** ___

2.) Experience: What skills do you feel you have that will contribute to the Board and Association? (Optional):

Extensive experience in financial analysis, financial planning, risk management. Additional experience in security system installations at commercial banks. Commercial roofing contractor experience.

3.) Why do you want to serve on the Board? (Optional):

To serve our community using my skill set to provide education, accountibility and transparency to the community.

I reside in a unit with, am married to, domestic partners with, or am related by blood, adoption or marriage within the third degree of consanguinity or affinity to another person who is also a member of the executive board or is an officer of the association. ____ **yes** X **no If yes, please explain on a separate sheet of paper).**

Note: Nothing cited in this disclosure is intended to prevent a potential candidate from running for the board of directors. Further, the Board will not prohibit a candidate from appearing on the ballot for failure to provide a disclosure statement, or for providing an inaccurate one or one with content that is defamatory, libelous or profane. Should a candidate not complete a disclosure statement, or should it contain content believed to be defamatory, libelous or profane, the board will note the fact in a statement to be included with election-related mailings. Further, a complaint may be filed with the Real Estate Division against the candidate who does not comply with the disclosure requirement.

Nominee Signature (Required): _____ 3/22/21

By signing this form I acknowledge that NRS 116.31034 requires a candidate to make all disclosures required by NRS 116.31034 in writing to the Association with his/her candidacy information, and that the disclosures must be distributed by the Association to each Member of the Association, with the ballot, in the manner established in the Bylaws of the Association, for that candidate to be eligible for office. By signing this form I agree to allow the Association to release any of the information I have supplied on this form.

Exhibit # 6
Pg 20

CANDIDACY DISCLOSURE STATEMENT

(Please Print or Type)

Name JOSEPH F. HUGHES

Address 905 LAKEVIEW DR. (Street) DAYTON (City) NV (State) 89403 (Zip)

Are you a unit owner? ..... ☒ Yes ☐ No

(NOTE: NRS 116.31034(1) states: Except as otherwise provided in subsection 5 of NRS 116.212, not later than the termination of any period of declarant's control, the units' owners shall elect an executive board of at least three members, all of whom must be units' owners.)

NRS 116.31034 (9) (a) & (b) and NRS 116.31034 (10) (a) & (b) states the following:

9. Each person who is nominated as a candidate for membership on the executive board pursuant to subsection 4 must:
   (a) Make a good faith effort to disclose any financial, business, professional or personal relationship or interest that would result or would appear to a reasonable person to result in a potential conflict of interest for the candidate if the candidate were to be elected to serve as a member of the executive board; and
   (b) Disclose whether the candidate is a member in good standing. For the purposes of this paragraph, a candidate shall not be deemed to be in "good standing" if the candidate has any unpaid and past due assessments or construction penalties that are required to be paid to the association.
10. Except as otherwise provided in subsections 11 and 12, unless a person is appointed by the declarant:
   (a) A person may not be a candidate for or member of the executive board or an officer of the association if:
      (1) The person resides in a unit with, is married to, is domestic partners with, or is related by blood, adoption or marriage within the third degree of consanguinity or affinity to another person who is also a member of the executive board or is an officer of the association;
      (2) The person stands to gain any personal profit or compensation of any kind from a matter before the executive board of the association; or
      (3) The person, the person's spouse or the person's parent or child, by blood, marriage or adoption, performs the duties of a community manager for that association.

   (b) A person may not be a candidate for or member of the executive board of a master association or an officer of that master association if the person, the person's spouse or the person's parent or child, by blood, marriage or adoption, performs the duties of a community manager for:
      (1) That master association; or
      (2) Any association that is subject to the governing documents of that master association.

Please use the following lines to respond to the statutory requirements pursuant to NRS 116.31034 (9) (a)

Attach additional sheets, if necessary: NO CONFLICTS OF INTREST OR INVESTMENTS IN THE GOLF COURSE.

I am a candidate in good standing pursuant to NRS 116.31034(9) (b): ..... ☒ Yes ☐ No

If no, please explain: _____

Please indicate all that apply to your relation to any board members, officer(s) of the association or community managers:

I am:

- ☐ Residing within the same unit as a board member or officer.
- ☐ Married to a board member or officer.
- ☐ Domestic partners with a board member or officer.
- ☒ None of the above

Related to a board member by:

- ☐ Blood
- ☐ Adoption
- ☐ Marriage within the third degree of consanguinity
- ☐ Affinity to another person
- ☒ None of the above

The candidate must make all disclosures required pursuant to this subsection in writing to the association with his or her candidacy information. Except as otherwise provided in this subsection, the association shall distribute the disclosures, on behalf of the candidate, to each member of the association with the ballot or, in the event ballots are not prepared and mailed pursuant to subsection 5, in the next regular mailing of the association. The association is not obligated to distribute any disclosure pursuant to this subsection if the disclosure contains information that is believed to be defamatory, libelous or profane.

Any additional information provided by the candidate for the executive board is voluntary and is not a requirement under NRS 116.31034.

Signature of candidate _____ *Date* 5/30/2021

Revised 7/18/19

850

Exhibit #6
Pg 21

RECEIVED MAR 22 2021

CANDIDACY EXPERIENCE STATEMENT

JOSEPH HUGHES
DIRECTOR
FORMER TREASURER
3/24/2021

By the time of the election I will have been a Board Member for just over six months. In the six months I have had the priveledge to represent the homeowners as a Director and Treasurer it has been an eye opening experience into the business of Common Interest Communities or HOA's. Make no mistake it is very much a business. The Dayton Valley Community Association is a corporation and a business in which you are an owner. You deserve the respect and representation afforded any business owner as a homeowners.

The education I have received in the past six months on how the laws that govern Common Interest Communities, (NRS 116 and related laws and regulations) in combination with my experiences in the financial arena, bank security systems and in the commercial roofing industry have all been called upon and served me well in the time I have had the priveledge to represent our interests in our community, and community owned business.

The future we face has some challenges, but nothing so big that we cannot overcome with the proper individuals guiding our community. The principals of honesty, integrity, transparency, accountability, financial and fiduciary responsibility have served me very well in my life and business affairs. These keystones, are the pillars of success upon which any successful community or business are built.

What I can promise you as your representitive, is adherence to the principals of honesty, integrity, transparency, accountability, financial and fiduciary responsibility that you have come to expect from me. As homeowners in our community business you deserve nothing less for providing your trust and faith in my representation.

I will be but one voice amongst seven, but I can promise you that your concerns and voices will be heard.

Thank you for your support.

Joe Hughes
Director

DAYTON VALLEY COMMNITY ASSOCIATION

Exhibit #6
Pg 22

Candidacy Disclosure Statement

This form is provided for Homeowners who wish to run for the Board of Directors (you may nominate yourself). You must return this form to us no later than March 24, 2021 by 5:00 PM. The official meeting notice advising the exact date, time and location of the Election meeting will be mailed to all homeowners eligible to vote at a later date. There are seven (7) seats on the Board to fill.

NAME OF NOMINEE: ___Jin Kepler_____

ARE YOU A HOMEOWNER IN THE ASSOCIATION STATED ABOVE? ____Yes_____ _____ **YES NO**

Per NRS 116.31034 (5) (a) and (b), please complete the following information regarding your candidacy. Please print your responses.

1.) Each person whose name is placed on the ballot as a candidate for a member of the executive Board must:

(a) Make a good faith effort to disclose any financial, business, professional or personal relationship or interest that would result or would appear to a reasonable person to result in a potential conflict of interest for the candidate if the candidate were to be elected to serve as a member of the executive board; and (Please respond to the statutory requirements cited above).

N/A

(b) disclose whether or not the candidate is a member in good standing for the purpose of this paragraph, a candidate shall not be deemed to be in "good standing" if the candidate has any unpaid or past due assessments or construction penalties that are required to be paid to the association. Please answer the question below by placing an X in the correct answer.

I am a member in "Good Standing" with the Association: Yes x____ No ____

2.) Experience: What skills do you feel you have that will contribute to the Board and Association? (Optional):

I have personally been a homeowner in Dayton Nv for over 30 Years and have lived at the golf course since 2005. Where I was the head Pro to the golf course from 1991-1998. Then I was the General Manager from 1998-2006. I helped with the homeowners before the HOA was established.

3.) Why do you want to serve on the Board? (Optional):

I want to help with the growth in our community. I enjoy the people and feel now is the time for us to make positive changes going forward. As the new owner to the golf course, I feel that a good relationship between the owners, community and golf course is a positive way to move forward.

I reside in a unit with, am married to, domestic partners with, or am related by blood, adoption or marriage within the third degree of consanguinity or affinity to another person who is also a member of the executive board or is an officer of the association. ____ yes _x___ no If yes, please explain on a separate sheet of paper).

Note: Nothing cited in this disclosure is intended to prevent a potential candidate from running for the board of directors. Further, the Board will not prohibit a candidate from appearing on the ballot for failure to provide a disclosure statement, or for providing an inaccurate one or one with content that is defamatory, libelous or profane. Should a candidate not complete a disclosure statement, or should it contain content believed to be defamatory, libelous or profane, the board will note the fact in a statement to be included with election-related mailings. Further, a complaint may be filed with the Real Estate Division against the candidate who does not comply with the disclosure requirement.

Nominee Signature (Required): Jin A Kepler

By signing this form I acknowledge that NRS 116.31034 requires a candidate to make all disclosures required by NRS 116.31034 in writing to the Association with his/her candidacy information, and that the disclosures must be distributed by the Association to each Member of the Association, with the ballot, in the manner established in the Bylaws of the Association, for that candidate to be eligible for office. By signing this form I agree to allow the Association to release any of the information I have supplied on this form.

Exhibit #6
Pg 23

CANDIDACY DISCLOSURE STATEMENT

(Please Print or Type)

Name James H. Kepler

Address 681 St. Andrews (Street) Dayton (City) Nv (State) 89403 (Zip)

Are you a unit owner? ..... ☒ Yes ☐ No

(NOTE: NRS 116.31034(1) states: Except as otherwise provided in subsection 5 of NRS 116.212, not later than the termination of any period of declarant's control, the units' owners shall elect an executive board of at least three members, all of whom must be units' owners.)

NRS 116.31034 (9) (a) & (b) and NRS 116.31034 (10) (a) & (b) states the following:

9. Each person who is nominated as a candidate for membership on the executive board pursuant to subsection 4 must:
   (a) Make a good faith effort to disclose any financial, business, professional or personal relationship or interest that would result or would appear to a reasonable person to result in a potential conflict of interest for the candidate if the candidate were to be elected to serve as a member of the executive board; and
   (b) Disclose whether the candidate is a member in good standing. For the purposes of this paragraph, a candidate shall not be deemed to be in "good standing" if the candidate has any unpaid and past due assessments or construction penalties that are required to be paid to the association.
10. Except as otherwise provided in subsections 11 and 12, unless a person is appointed by the declarant:
   (a) A person may not be a candidate for or member of the executive board or an officer of the association if:
      (1) The person resides in a unit with, is married to, is domestic partners with, or is related by blood, adoption or marriage within the third degree of consanguinity or affinity to another person who is also a member of the executive board or is an officer of the association;
      (2) The person stands to gain any personal profit or compensation of any kind from a matter before the executive board of the association; or
      (3) The person, the person's spouse or the person's parent or child, by blood, marriage or adoption, performs the duties of a community manager for that association.

   (b) A person may not be a candidate for or member of the executive board of a master association or an officer of that master association if the person, the person's spouse or the person's parent or child, by blood, marriage or adoption, performs the duties of a community manager for:
      (1) That master association; or
      (2) Any association that is subject to the governing documents of that master association.

Please use the following lines to respond to the statutory requirements pursuant to NRS 116.31034 (9) (a)

Attach additional sheets, if necessary: See Attached Statement JK

I am a candidate in good standing pursuant to NRS 116.31034(9) (b): ..... ☒ Yes ☐ No

If no, please explain: _____

Please indicate all that apply to your relation to any board members, officer(s) of the association or community managers:

I am:

- ☐ Residing within the same unit as a board member or officer.
- ☐ Married to a board member or officer.
- ☐ Domestic partners with a board member or officer.
- ☒ **None of the above**

Related to a board member by:

- ☐ Blood
- ☐ Adoption
- ☐ Marriage within the third degree of consanguinity
- ☐ Affinity to another person
- ☒ **None of the above**

The candidate must make all disclosures required pursuant to this subsection in writing to the association with his or her candidacy information. Except as otherwise provided in this subsection, the association shall distribute the disclosures, on behalf of the candidate, to each member of the association with the ballot or, in the event ballots are not prepared and mailed pursuant to subsection 5, in the next regular mailing of the association. The association is not obligated to distribute any disclosure pursuant to this subsection if the disclosure contains information that is believed to be defamatory, libelous or profane.

Any additional information provided by the candidate for the executive board is voluntary and is not a requirement under NRS 116.31034.

James H. Kepler
Signature of candidate

5/26/2021
Date

Revised 7/18/19

850

Exhibit #6
Pg 24

March 23, 2021

To Whom it May Concern:

My name is Jim Kepler, Sr. I have been a resident of Dayton Valley since 1991. As a Class A PGA Golf Professional for 36 years and present during the inception of Dayton Valley Golf Course I feel I have the dedication necessary to be an effective and knowledgeable asset to the Homeowner's Association Board.

I personally purchased a home on the golf course in 2005 and have watched the Dayton Valley Gated Community grow from 6 homes to over 800 homes. Previously as the General Manager from 1998-2006 and then being rehired in 2018 to manage again, I have worked extensively with the Developers, the HOA and County Officials to make DV a great community to live.

My wife and I have raised six children here and we are committed to the Dayton community. I have established not only business relationships but community relationships with the education system, youth sports, Veterans, Water, Sewer, County Fire Department, Lyon County Public Works, Chamber of Commerce and Community Roots.

I have formed lasting relationships with the Homeowner's on the golf course and in the surrounding community. In December 2020, with the support of Dayton Valley homeowners and outside investors, we completed the purchase of Dayton Valley Golf Course. As such, I have a vested interest in seeing the community continue to flourish.

I also want to assure the board that if there are potential conflicts of interest, I will always recuse myself.

I would appreciate your support for a position on the board.

Sincerely, Jim Kepler, Sr.

Exhibit #6
Pg 25

9874888-14-3-4

DAYTON VALLEY COMMNITY ASSOCIATION

Candidacy Disclosure Statement

s form is provided for Homeowners who wish to run for the Board of Directors (you may nominate yourself). You must return this form to us no later than **March 24, 2021 by 5:00 PM.** The official meeting notice advising the exact date, time and location of the Election meeting will be mailed to all homeowners eligible to vote at a later date. There are seven (7) seats on the Board to fill.

NAME OF NOMINEE: DOUG KREIE

ARE YOU A HOMEOWNER IN THE ASSOCIATION STATED ABOVE? _____ _____

(YES) NO

Per NRS 116.31034 (5) (a) and (b), please complete the following information regarding your candidacy. Please print your responses.

1.) Each person whose name is placed on the ballot as a candidate for a member of the executive Board must:

(a) Make a good faith effort to disclose any financial, business, professional or personal relationship or interest that would result or would appear to a reasonable person to result in a potential conflict of interest for the candidate if the candidate were to be elected to serve as a member of the executive board; and (Please respond to the statutory requirements cited above).

(b) disclose whether or not the candidate is a member in good standing for the purpose of this paragraph, a candidate shall not be deemed to be in "good standing" if the candidate has any unpaid or past due assessments or construction penalties that are required to be paid to the association. Please answer the question below by placing an X in the correct answer.

I am a member in "Good Standing" with the Association: Yes X **No** ___

2.) Experience: What skills do you feel you have that will contribute to the Board and Association? (Optional):

SELF EMPLOYED FOR 30 YEARS DEALING IN ALL ASPECTS OF BUSINESS

3.) Why do you want to serve on the Board? (Optional):

I HAVE BEEN ON THE BOARD FOR 2 YEARS AS ARCHITECURAN COMMITTE CHAIRMAN & WOULD LIKE TO CONTINUE.

I reside in a unit with, am married to, domestic partners with, or am related by blood, adoption or marriage within the third degree of consanguinity or affinity to another person who is also a member of the executive board or is an officer of the association. ____ yes ____ no If yes, please explain on a separate sheet of paper).

Note: Nothing cited in this disclosure is intended to prevent a potential candidate from running for the board of directors. Further, the Board will not prohibit a candidate from appearing on the ballot for failure to provide a disclosure statement, or for providing an inaccurate one or one with content that is defamatory, libelous or profane. Should a candidate not complete a disclosure statement, or should it contain content believed to be defamatory, libelous or profane, the board will note the fact in a statement to be included with election-related mailings. Further, a complaint may be filed with the Real Estate Division against the candidate who does not comply with the disclosure requirement.

Nominee Signature (Required): D. Kreie

By signing this form I acknowledge that NRS 116.31034 requires a candidate to make all disclosures required by NRS 116.31034 in writing to the Association with his/her candidacy information, and that the disclosures must be distributed by the Association to each Member of the Association, with the ballot, in the manner established in the Bylaws of the Association, for that candidate to be eligible for office. By signing this form I agree to allow the Association to release any of the information I have supplied on this form.

9874888 8759FCMP-2

Exhibit #6
Pg 26

CANDIDACY DISCLOSURE STATEMENT

(Please Print or Type)

Name DOUG KREIS

Address 144 SAWGRASS LN DAYTON NV. 89403
(Street) (City) (State) (Zip)

Are you a unit owner? ..... ☒ Yes ☐ No

(NOTE: NRS 116.31034(1) states: Except as otherwise provided in subsection 5 of NRS 116.212, not later than the termination of any period of declarant's control, the units' owners shall elect an executive board of at least three members, all of whom must be units' owners.)

NRS 116.31034 (9) (a) & (b) and NRS 116.31034 (10) (a) & (b) states the following:

9. Each person who is nominated as a candidate for membership on the executive board pursuant to subsection 4 must:
   (a) Make a good faith effort to disclose any financial, business, professional or personal relationship or interest that would result or would appear to a reasonable person to result in a potential conflict of interest for the candidate if the candidate were to be elected to serve as a member of the executive board; and
   (b) Disclose whether the candidate is a member in good standing. For the purposes of this paragraph, a candidate shall not be deemed to be in "good standing" if the candidate has any unpaid and past due assessments or construction penalties that are required to be paid to the association.
10. Except as otherwise provided in subsections 11 and 12, unless a person is appointed by the declarant:
   (a) A person may not be a candidate for or member of the executive board or an officer of the association if:
      (1) The person resides in a unit with, is married to, is domestic partners with, or is related by blood, adoption or marriage within the third degree of consanguinity or affinity to another person who is also a member of the executive board or is an officer of the association;
      (2) The person stands to gain any personal profit or compensation of any kind from a matter before the executive board of the association; or
      (3) The person, the person's spouse or the person's parent or child, by blood, marriage or adoption, performs the duties of a community manager for that association.

   (b) A person may not be a candidate for or member of the executive board of a master association or an officer of that master association if the person, the person's spouse or the person's parent or child, by blood, marriage or adoption, performs the duties of a community manager for:
      (1) That master association; or
      (2) Any association that is subject to the governing documents of that master association.

Please use the following lines to respond to the statutory requirements pursuant to NRS 116.31034 (9) (a)

Attach additional sheets, if necessary: I AM A MINORITY STOCKHOLDER IN TOUR SPECS

I am a candidate in good standing pursuant to NRS 116.31034(9) (b): ..... ☒ Yes ☐ No

If no, please explain: _____

Please indicate all that apply to your relation to any board members, officer(s) of the association or community managers:

I am:
- ☐ Residing within the same unit as a board member or officer.
- ☐ Married to a board member or officer.
- ☐ Domestic partners with a board member or officer.
- ☒ None of the above

Related to a board member by:
- ☐ Blood
- ☐ Adoption
- ☐ Marriage within the third degree of consanguinity
- ☐ Affinity to another person
- ☒ None of the above

The candidate must make all disclosures required pursuant to this subsection in writing to the association with his or her candidacy information. Except as otherwise provided in this subsection, the association shall distribute the disclosures, on behalf of the candidate, to each member of the association with the ballot or, in the event ballots are not prepared and mailed pursuant to subsection 5, in the next regular mailing of the association. The association is not obligated to distribute any disclosure pursuant to this subsection if the disclosure contains information that is believed to be defamatory, libelous or profane.

Any additional information provided by the candidate for the executive board is voluntary and is not a requirement under NRS 116.31034.

Signature of candidate _____ *Date* 6-2-2021

Revised 7/18/19

850

Exhibit #6
Pg 27

My name is Doug Kreie and I am running for reelection to the Board of Directors of the Dayton Valley Home Owners Association

I have 30 years' experience as a business owner. I have worked with financials and expense reports as well as profit and loss, cash flow analysis long term views and forward thinking. If this is the type of person you want on the board I would like your vote. I have served as your architectural committee chairman for the last two and a half years. If you have been happy with the way your applications have been handled I would appreciate your vote.

Also I would like to endorse Dennis Drury, Sandy Mass, and Paula Darragh for reelection.

Exhibit #6
Pg 28

DAYTON VALLEY COMMNITY ASSOCIATION

RECEIVED MAR 23 2021

Candidacy Disclosure Statement

This form is provided for Homeowners who wish to run for the Board of Directors (you may nominate yourself). You must return this form to us no later than **March 24, 2021 by 5:00 PM.** The official meeting notice advising the exact date, time and location of the Election meeting will be mailed to all homeowners eligible to vote at a later date. There are seven (7) seats on the Board to fill.

NAME OF NOMINEE: JOAN LATIMER

ARE YOU A HOMEOWNER IN THE ASSOCIATION STATED ABOVE? YES _____

(YES) NO

Per NRS 116.31034 (5) (a) and (b), please complete the following information regarding your candidacy. Please print your responses.

1.) Each person whose name is placed on the ballot as a candidate for a member of the executive Board must:

(a) Make a good faith effort to disclose any financial, business, professional or personal relationship or interest that would result or would appear to a reasonable person to result in a potential conflict of interest for the candidate if the candidate were to be elected to serve as a member of the executive board; and (Please respond to the statutory requirements cited above).

NONE

(b) disclose whether or not the candidate is a member in good standing for the purpose of this paragraph, a candidate shall not be deemed to be in "good standing" if the candidate has any unpaid or past due assessments or construction penalties that are required to be paid to the association. Please answer the question below by placing an X in the correct answer.

I am a member in "Good Standing" with the Association: Yes ✓ **No** ___

2.) Experience: What skills do you feel you have that will contribute to the Board and Association? (Optional):

SEE Attached

3.) Why do you want to serve on the Board? (Optional):

I reside in a unit with, am married to, domestic partners with, or am related by blood, adoption or marriage within the third degree of consanguinity or affinity to another person who is also a member of the executive board or is an officer of the association. ___ yes ✓ **no If yes, please explain on a separate sheet of paper).**

Note: Nothing cited in this disclosure is intended to prevent a potential candidate from running for the board of directors. Further, the Board will not prohibit a candidate from appearing on the ballot for failure to provide a disclosure statement, or for providing an inaccurate one or one with content that is defamatory, libelous or profane. Should a candidate not complete a disclosure statement, or should it contain content believed to be defamatory, libelous or profane, the board will note the fact in a statement to be included with election-related mailings. Further, a complaint may be filed with the Real Estate Division against the candidate who does not comply with the disclosure requirement.

Nominee Signature (Required): Joan Latimer

By signing this form I acknowledge that NRS 116.31034 requires a candidate to make all disclosures required by NRS 116.31034 in writing to the Association with his/her candidacy information, and that the disclosures must be distributed by the Association to each Member of the Association, with the ballot, in the manner established in the Bylaws of the Association, for that candidate to be eligible for office. By signing this form I agree to allow the Association to release any of the information I have supplied on this form.

Exhibit #6
Pg 29

CANDIDACY DISCLOSURE STATEMENT

(Please Print or Type)

Name JOAN L. LATIMER

Address 104 Poppy Hills Court DAYTON NEVADA 89403
(Street) (City) (State) (Zip)

Are you a unit owner? ..... ☒ Yes ☐ No

(NOTE: NRS 116.31034 (1) states: Except as otherwise provided in subsection 5 of NRS 116.212, not later than the termination of any period of declarant's control, the units' owners shall elect an executive board of at least three members, all of whom must be units' owners.)

NRS 116.31034 (9) (a) & (b) and NRS 116.31034 (10) (a) & (b) states the following:

9. Each person who is nominated as a candidate for membership on the executive board pursuant to subsection 4 must:
   (a) Make a good faith effort to disclose any financial, business, professional or personal relationship or interest that would result or would appear to a reasonable person to result in a potential conflict of interest for the candidate if the candidate were to be elected to serve as a member of the executive board; and
   (b) Disclose whether the candidate is a member in good standing. For the purposes of this paragraph, a candidate shall not be deemed to be in "good standing" if the candidate has any unpaid and past due assessments or construction penalties that are required to be paid to the association.
10. Except as otherwise provided in subsections 11 and 12, unless a person is appointed by the declarant:
   (a) A person may not be a candidate for or member of the executive board or an officer of the association if:
      (1) The person resides in a unit with, is married to, is domestic partners with, or is related by blood, adoption or marriage within the third degree of consanguinity or affinity to another person who is also a member of the executive board or is an officer of the association;
      (2) The person stands to gain any personal profit or compensation of any kind from a matter before the executive board of the association; or
      (3) The person, the person's spouse or the person's parent or child, by blood, marriage or adoption, performs the duties of a community manager for that association.
   (b) A person may not be a candidate for or member of the executive board of a master association or an officer of that master association if the person, the person's spouse or the person's parent or child, by blood, marriage or adoption, performs the duties of a community manager for:
      (1) That master association; or
      (2) Any association that is subject to the governing documents of that master association.

Please use the following lines to respond to the statutory requirements pursuant to NRS 116.31034 (9) (a)

Attach additional sheets, if necessary:

I am a candidate in good standing pursuant to NRS 116.31034(9) (b): ..... ☒ Yes ☐ No

If no, please explain:

Please indicate all that apply to your relation to any board members, officer(s) of the association or community managers:

I am:
- ☐ Residing within the same unit as a board member or officer.
- ☐ Married to a board member or officer.
- ☐ Domestic partners with a board member or officer.
- ☒ None of the above

Related to a board member by:
- ☐ Blood
- ☐ Adoption
- ☐ Marriage within the third degree of consanguinity
- ☐ Affinity to another person
- ☒ None of the above

The candidate must make all disclosures required pursuant to this subsection in writing to the association with his or her candidacy information. Except as otherwise provided in this subsection, the association shall distribute the disclosures, on behalf of the candidate, to each member of the association with the ballot or, in the event ballots are not prepared and mailed pursuant to subsection 5, in the next regular mailing of the association. The association is not obligated to distribute any disclosure pursuant to this subsection if the disclosure contains information that is believed to be defamatory, libelous or profane.

Any additional information provided by the candidate for the executive board is voluntary and is not a requirement under NRS 116.31034.

Joan L. Latimer
Signature of candidate

May 27, 2021
Date

Revised 7/18/19

850

Exhibit #6
Pg 30

RECEIVED MAR 23 2021

RECEIVED MAR 23 2021

JOAN LATIMER
Candidacy Disclosure Statement

EXPERIENCE AND SKILLS THAT I CAN CONTRIBUTE TO THE BOARD AND ASSOCIATION

I have served on a HOA Board in Napa, California for three two year terms. While not as large as our community here we did have our share of problems. Those problems included a wayward management company as well as several over dominant Board Members. I also served on the board of a private water company located in Shingletown, California. My experience there included having a hired office manager whose job was to bill water users as well as purchase items needed for the water company without board approval under $300.00. The manager was arrested and charged with embezzlement of over $38,000 in purchases that were bought and then returned for cash. Three of the board members were more than aware that this was taking place. While they did not face charges they were removed from the board.

REASONS FOR WANTING TO SERVE ON THE BOARD

From the above experiences I feel strongly that the board and management company need to be watched closely when it comes to financial matters. It is every homeowner right to know exactly where the money is being spent. A copy of the minutes as well as a current financial report from the last months board meeting should be sent to every homeowner with the agenda for the upcoming meeting. If the financials can not be sent monthly then at least quarterly.

Another huge concern is the way the current board meetings are performed. As homeowners we have the right to hear what is taking place during the meetings. I would make it a top priority to find a way so all can hear during the current call in meetings. When I asked the board when the meetings will be open now that Covid restrictions are lessoning I was told the board will have to find a place that will seat 800 members. I call that an excuse to keep the meeting private. My time sitting on a HOA Board we rarely had more than a 1/8 of the homeowners attend. I doubt the numbers would be much different here in Dayton. Where there is a will there is a way and I will find a way.

Another area of concern is a lack of camaraderie amongst the current Board Members. How can a board work efficiently when there appears to be so much animosity between members. Every board member deserves the right to voice their concerns. Every Board member deserves answers they seek. This is where I would hope to act as a mediator. I am one who will vote for what I feel is best for the community not myself.

All homeowners please take the time to educate yourself on Nevada's Senate Bill 144 and how that bill can effect you. Briefly, if a board raises the HOA fees substantially or a special assessment is brought forth and you cannot afford to pay the money owed, SB 144 allows investors to come forward and buy your home for very little. No where near the market value! This has happened as close as Reno! I find this frightening. If we had been aware of this Bill we most likely would have chosen elsewhere to live. We must be allowed to see where and how the board is spending our money. My intention is to make this happen.

In closing my main reason for running for a Board position is to bring open transparency between the Board and the Homeowners. The Board of Directors is a requirement for homeowner associations to function properly. The elected volunteers are responsible for all operations of the association to ensure the governing documents are followed and enforced.

Thank you for your consideration.

Joan Latimer

Exhibit #6
Pg 31

DAYTON VALLEY COMMNITY ASSOCIATION

Candidacy Disclosure Statement

This form is provided for Homeowners who wish to run for the Board of Directors (you may nominate yourself). You must return this form to us no later than **March 24, 2021 by 5:00 PM.** The official meeting notice advising the exact date, time and location of the Election meeting will be mailed to all homeowners eligible to vote at a later date. There are seven (7) seats on the Board to fill.

NAME OF NOMINEE: Sandra (Sandy) Mass

ARE YOU A HOMEOWNER IN THE ASSOCIATION STATED ABOVE? ___YES___ _____

YES **NO**

Per NRS 116.31034 (5) (a) and (b), please complete the following information regarding your candidacy. Please print your responses.

1.) Each person whose name is placed on the ballot as a candidate for a member of the executive Board must:

(a) Make a good faith effort to disclose any financial, business, professional or personal relationship or interest that would result or would appear to a reasonable person to result in a potential conflict of interest for the candidate if the candidate were to be elected to serve as a member of the executive board; and (Please respond to the statutory requirements cited above).

I have no conflict of interest.

(b) disclose whether or not the candidate is a member in good standing for the purpose of this paragraph, a candidate shall not be deemed to be in "good standing" if the candidate has any unpaid or past due assessments or construction penalties that are required to be paid to the association. Please answer the question below by placing an X in the correct answer.

I am a member in "Good Standing" with the Association: Yes _X_ **No** ___

2.) Experience: What skills do you feel you have that will contribute to the Board and Association? (Optional):

I have held several management and professional positions in Information Technology during my career. I have experience in many industries and areas of accounting, finance, and event planning. I also have prior experience with other membership organizations.

3.) Why do you want to serve on the Board? (Optional):

I have managed the DVCA website for 4+ years. I was appointed to the board in 2018 and currently act as vice-president. I believe my career experiencein many industries and positions , along with my work with the HOA, gives me a good grasp of what is necessary to operate our HOA.

Personally, I see volunteering to serve on our HOA board as a way to give back to our community.

I reside in a unit with, am married to, domestic partners with, or am related by blood, adoption or marriage within the third degree of consanguinity or affinity to another person who is also a member of the executive board or is an officer of the association. ____ **yes** _X_ **no If yes, please explain on a separate sheet of paper).**

Note: Nothing cited in this disclosure is intended to prevent a potential candidate from running for the board of directors. Further, the Board will not prohibit a candidate from appearing on the ballot for failure to provide a disclosure statement, or for providing an inaccurate one or one with content that is defamatory, libelous or profane. Should a candidate not complete a disclosure statement, or should it contain content believed to be defamatory, libelous or profane, the board will note the fact in a statement to be included with election-related mailings. Further, a complaint may be filed with the Real Estate Division against the candidate who does not comply with the disclosure requirement.

Nominee Signature (Required): Sandra C Mass

By signing this form I acknowledge that NRS 116.31034 requires a candidate to make all disclosures required by NRS 116.31034 in writing to the Association with his/her candidacy information, and that the disclosures must be distributed by the Association to each Member of the Association, with the ballot, in the manner established in the Bylaws of the Association, for that candidate to be eligible for office. By signing this form I agree to allow the Association to release any of the information I have supplied on this form.

Exhibit #6
Pg 32

CANDIDACY DISCLOSURE STATEMENT

(Please Print or Type)

Name Sandra (Sandy) Mass

Address 285 La Costa Ave, Dayton NV
(Street) (City) (State) (Zip)

Are you a unit owner? ..... ☑ Yes ☐ No

(NOTE: NRS 116.31034(1) states: Except as otherwise provided in subsection 5 of NRS 116.212, not later than the termination of any period of declarant's control, the units' owners shall elect an executive board of at least three members, all of whom must be units' owners.)

NRS 116.31034 (9) (a) & (b) and NRS 116.31034 (10) (a) & (b) states the following:

9. Each person who is nominated as a candidate for membership on the executive board pursuant to subsection 4 must:
   (a) Make a good faith effort to disclose any financial, business, professional or personal relationship or interest that would result or would appear to a reasonable person to result in a potential conflict of interest for the candidate if the candidate were to be elected to serve as a member of the executive board; and
   (b) Disclose whether the candidate is a member in good standing. For the purposes of this paragraph, a candidate shall not be deemed to be in "good standing" if the candidate has any unpaid and past due assessments or construction penalties that are required to be paid to the association.
10. Except as otherwise provided in subsections 11 and 12, unless a person is appointed by the declarant:
   (a) A person may not be a candidate for or member of the executive board or an officer of the association if:
      (1) The person resides in a unit with, is married to, is domestic partners with, or is related by blood, adoption or marriage within the third degree of consanguinity or affinity to another person who is also a member of the executive board or is an officer of the association;
      (2) The person stands to gain any personal profit or compensation of any kind from a matter before the executive board of the association; or
      (3) The person, the person's spouse or the person's parent or child, by blood, marriage or adoption, performs the duties of a community manager for that association.

   (b) A person may not be a candidate for or member of the executive board of a master association or an officer of that master association if the person, the person's spouse or the person's parent or child, by blood, marriage or adoption, performs the duties of a community manager for:
      (1) That master association; or
      (2) Any association that is subject to the governing documents of that master association.

Please use the following lines to respond to the statutory requirements pursuant to NRS 116.31034 (9) (a)

Attach additional sheets, if necessary:

I have no conflicts of interest.

I am a candidate in good standing pursuant to NRS 116.31034(9) (b): ..... ☑ Yes ☐ No

If no, please explain: _____

Please indicate all that apply to your relation to any board members, officer(s) of the association or community managers:

I am:

- ☐ Residing within the same unit as a board member or officer.
- ☐ Married to a board member or officer.
- ☐ Domestic partners with a board member or officer.
- ☑ **None of the above**

Related to a board member by:

- ☐ Blood
- ☐ Adoption
- ☐ Marriage within the third degree of consanguinity
- ☐ Affinity to another person
- ☑ **None of the above**

The candidate must make all disclosures required pursuant to this subsection in writing to the association with his or her candidacy information. Except as otherwise provided in this subsection, the association shall distribute the disclosures, on behalf of the candidate, to each member of the association with the ballot or, in the event ballots are not prepared and mailed pursuant to subsection 5, in the next regular mailing of the association. The association is not obligated to distribute any disclosure pursuant to this subsection if the disclosure contains information that is believed to be defamatory, libelous or profane.

Any additional information provided by the candidate for the executive board is voluntary and is not a requirement under NRS 116.31034.

Sandra L Mass
Signature of candidate

6/1/2021
Date

Revised 7/18/19

850

Exhibit #6
Pg 33

March 23, 2021

Hello – my name is Sandy Mass, and I am currently your Vice-President of the Dayton Valley Community Association (DVCA). For the first time since I started working with the DVCA Committees and Board, we have enough candidates to hold an election! I believe that is good news; active participation within our community brings new ideas, plus more volunteers can ease the load on everyone. It is not just board members that are needed, we need volunteers for committees as well.

During the summer of 2015, my parents and I visited my sister, who lives in here in DVCA. Dad fell in love with the area, so we bought a house and moved here in November of 2015. I began attending board meetings and volunteering for committees in 2016. I worked with Bob Grant, the treasurer at the time, on the budget committee and assisted with the migration to the new website. After Bob resigned, the board asked me to take over administration of the website and production of the newsletter. Soon after that, Mike Becker asked if I would accept a vacant board seat and I accepted. Since then, I have participated on several committees and late 2018 became vice-president at Dennis Drury's request.

Participating on the DVCA board allows me to use many of the skills I accumulated during my career. I have worked in Information Technology in a variety of positions and industries since I got my first degree in Information and Computer Science at the University of California, Irvine. I have worked with many organizations, designing, and implementing new applications and processes. Much of this has directed my goals while working with the board.

The COVID-19 pandemic has accelerated the use of even more technology to conduct HOA business. We need to create an environment that is more conducive to 'business continuity' and to meet NRS requirements. This includes document storage along with processes that make it easier for new, as well as current, board members and community managers (currently CAMCO) to FIND, manage and store documents resulting from their work. We have taken the first steps, but have work to do formalizing these processes, the first of which is how to manage and document the bid process while storing that work product for the future.

I ask for your vote. I have recently retired and plan to stay here until they haul me away. I love living here, surrounded by mountains. Working as a board member for the HOA gives me a way to contribute to the community.

I would like to continue working with a team of individuals that have stepped up to do the work that it takes to manage one of the largest HOAs in Nevada. That is why I am endorsing Dennis Drury, Paula Darragh, and Doug Kreie. They have continued to give to this community under extraordinarily difficult times and deserve your vote.

Please consider the candidate statements and VOTE! for the candidates you believe will do the best job for our HOA.

Thank you for your vote!
Sandy Mass, Vice-President, Dayton Valley Community Association

Exhibit #6
Pg 34

DAYTON VALLEY COMMNITY ASSOCIATION

RECEIVED MAR 22 2021

Candidacy Disclosure Statement

This form is provided for Homeowners who wish to run for the Board of Directors (you may nominate yourself). You must return this form to us no later than **March 24, 2021 by 5:00 PM.** The official meeting notice advising the exact date, time and location of the Election meeting will be mailed to all homeowners eligible to vote at a later date. There are seven (7) seats on the Board to fill.

NAME OF NOMINEE: Lisa Miller-Hobbs

ARE YOU A HOMEOWNER IN THE ASSOCIATION STATED ABOVE? _____ _____

(YES) NO

Per NRS 116.31034 (5) (a) and (b), please complete the following information regarding your candidacy. Please print your responses.

1.) Each person whose name is placed on the ballot as a candidate for a member of the executive Board must:

(a) Make a good faith effort to disclose any financial, business, professional or personal relationship or interest that would result or would appear to a reasonable person to result in a potential conflict of interest for the candidate if the candidate were to be elected to serve as a member of the executive board; and (Please respond to the statutory requirements cited above).

I have no financial, business, professional or personal interests that would conflict with serving as a DVCA board member as I am current a full-time caregiver to my disabled spouse.

(b) disclose whether or not the candidate is a member in good standing for the purpose of this paragraph, a candidate shall not be deemed to be in "good standing" if the candidate has any unpaid or past due assessments or construction penalties that are required to be paid to the association. Please answer the question below by placing an X in the correct answer.

I am a member in "Good Standing" with the Association: Yes ✓ **No** ___ I will pay past due assessments the day that I submit this application.

2.) Experience: What skills do you feel you have that will contribute to the Board and Association? (Optional):

I have served on several different boards as both a regular board member and as an officer. I have a business management + an insurance degree and currently hold a valid CA Real Estate agent license.

3.) Why do you want to serve on the Board? (Optional):

I would like to serve on the Board because I believe I have the skill set to help the board and the homeowners become a more cohesive entity.

I reside in a unit with, am married to, domestic partners with, or am related by blood, adoption or marriage within the third degree of consanguinity or affinity to another person who is also a member of the executive board or is an officer of the association. ___ **yes** ✓ **no If yes, please explain on a separate sheet of paper).**

Note: Nothing cited in this disclosure is intended to prevent a potential candidate from running for the board of directors. Further, the Board will not prohibit a candidate from appearing on the ballot for failure to provide a disclosure statement, or for providing an inaccurate one or one with content that is defamatory, libelous or profane. Should a candidate not complete a disclosure statement, or should it contain content believed to be defamatory, libelous or profane, the board will note the fact in a statement to be included with election-related mailings. Further, a complaint may be filed with the Real Estate Division against the candidate who does not comply with the disclosure requirement.

Nominee Signature (Required): Lisa Miller-Hobbs

By signing this form I acknowledge that NRS 116.31034 requires a candidate to make all disclosures required by NRS 116.31034 in writing to the Association with his/her candidacy information, and that the disclosures must be distributed by the Association to each Member of the Association, with the ballot, in the manner established in the Bylaws of the Association, for that candidate to be eligible for office. By signing this form I agree to allow the Association to release any of the information I have supplied on this form.

Exhibit #6
Pg 35

CANDIDACY DISCLOSURE STATEMENT

(Please Print or Type)

Name Lisa Miller-Hobbs

Address 610 Champions Dr. (Street) Dayton (City) NV (State) 89403 (Zip)

Are you a unit owner? ..... ☒ Yes ☐ No

(NOTE: NRS 116.31034(1) states: Except as otherwise provided in subsection 5 of NRS 116.212, not later than the termination of any period of declarant's control, the units' owners shall elect an executive board of at least three members, all of whom must be units' owners.)

NRS 116.31034 (9) (a) & (b) and NRS 116.31034 (10) (a) & (b) states the following:

9. Each person who is nominated as a candidate for membership on the executive board pursuant to subsection 4 must:
   (a) Make a good faith effort to disclose any financial, business, professional or personal relationship or interest that would result or would appear to a reasonable person to result in a potential conflict of interest for the candidate if the candidate were to be elected to serve as a member of the executive board; and
   (b) Disclose whether the candidate is a member in good standing. For the purposes of this paragraph, a candidate shall not be deemed to be in "good standing" if the candidate has any unpaid and past due assessments or construction penalties that are required to be paid to the association.
10. Except as otherwise provided in subsections 11 and 12, unless a person is appointed by the declarant:
   (a) A person may not be a candidate for or member of the executive board or an officer of the association if:
      (1) The person resides in a unit with, is married to, is domestic partners with, or is related by blood, adoption or marriage within the third degree of consanguinity or affinity to another person who is also a member of the executive board or is an officer of the association;
      (2) The person stands to gain any personal profit or compensation of any kind from a matter before the executive board of the association; or
      (3) The person, the person's spouse or the person's parent or child, by blood, marriage or adoption, performs the duties of a community manager for that association.

   (b) A person may not be a candidate for or member of the executive board of a master association or an officer of that master association if the person, the person's spouse or the person's parent or child, by blood, marriage or adoption, performs the duties of a community manager for:
      (1) That master association; or
      (2) Any association that is subject to the governing documents of that master association.

Please use the following lines to respond to the statutory requirements pursuant to NRS 116.31034 (9) (a)

Attach additional sheets, if necessary: I have no financial, business, professional or personal interests that would be a conflict of interest.

I am a candidate in good standing pursuant to NRS 116.31034(9) (b): ..... ☒ Yes ☐ No

If no, please explain: _____

Please indicate all that apply to your relation to any board members, officer(s) of the association or community managers:

I am:

- ☐ Residing within the same unit as a board member or officer.
- ☐ Married to a board member or officer.
- ☐ Domestic partners with a board member or officer.
- ☒ None of the above

Related to a board member by:

- ☐ Blood
- ☐ Adoption
- ☐ Marriage within the third degree of consanguinity
- ☐ Affinity to another person
- ☒ None of the above

The candidate must make all disclosures required pursuant to this subsection in writing to the association with his or her candidacy information. Except as otherwise provided in this subsection, the association shall distribute the disclosures, on behalf of the candidate, to each member of the association with the ballot or, in the event ballots are not prepared and mailed pursuant to subsection 5, in the next regular mailing of the association. The association is not obligated to distribute any disclosure pursuant to this subsection if the disclosure contains information that is believed to be defamatory, libelous or profane.

Any additional information provided by the candidate for the executive board is voluntary and is not a requirement under NRS 116.31034.

Lisa Miller-Hobbs
Signature of candidate

05-26-2021
Date

CICC0060

Exhibit #6
Pg 36

RECEIVED MAR 22 2021

DVCA Board of Directors
Candidate Informational Statement
for
Lisa Miller-Hobbs

Hello Neighbors,

I would like to take the opportunity to introduce myself to you and share a little of my background in hope that you will consider my candidacy as a Board Member for the Dayton Valley Community Association.

I have watched this community be built from the beginning in the early 2000's although I did not purchase my home until 2012 and did not become a full-time resident until mid-March 2019. With that being said, I have witnessed many changes that have occurred to our community including the real estate market crash and its aftermath as well as the current real estate boom. I have also seen a lot of changes regarding our HOA including decreased community involvement, multiple changes in HOA management with each change resulting in more and more HOA decisions being delegated to the management company.

Personally, I feel that the Homeowners, through the election of a strong Board of Directors should be the ones in charge of making the decisions relating to their HOA. The HOA management company is an employee of ours, the homeowners, not the other way around. I also feel that the homeowners are owed complete transparency and accountability from their elected Board Members as well as from the HOA management company without exception.

I also understand that being a volunteer Board Member requires a commitment like no other after having served as a Board Member or Officer in several organizations in California including Insurance Women of Sacramento, Inc., where I was the Secretary and Committee Chairwoman of the monthly newsletter as well an Insurance Institute of America Certified Instructor for classes in general insurance. I was both an officer and a regular board member of the Greater Sacramento Area GSA USBC Association where I chaired or was a member of the following committees: Budget & Audit, Bylaws, Tournaments, Annual Hall of Fame Induction Dinner, Ways and Means, Susan B. Komen Bowl for the Cure, Bowlers to Veterans, Bowling Center Liaison. Next, I was a Director and then an Officer of the Sacramento Women's 600 Club for many years.

Lastly, I have over 30 years of combined experience in the insurance and real estate industries in California, of which I can apply to the business of the DVCA HOA.

Thank you for your consideration. It would be an honor to serve as Director of the Dayton Valley Community Association.

Exhibit #6
Pg 37

DAYTON VALLEY COMMNITY ASSOCIATION

RECEIVED MAR 22 2021

Candidacy Disclosure Statement

This form is provided for Homeowners who wish to run for the Board of Directors (you may nominate yourself). You must return this form to us no later than **March 24, 2021 by 5:00 PM.** The official meeting notice advising the exact date, time and location of the Election meeting will be mailed to all homeowners eligible to vote at a later date. There are seven (7) seats on the Board to fill.

NAME OF NOMINEE: Amy Puzzo

ARE YOU A HOMEOWNER IN THE ASSOCIATION STATED ABOVE? Yes _____

YES NO

Per NRS 116.31034 (5) (a) and (b), please complete the following information regarding your candidacy. Please print your responses.

1.) Each person whose name is placed on the ballot as a candidate for a member of the executive Board must:

(a) Make a good faith effort to disclose any financial, business, professional or personal relationship or interest that would result or would appear to a reasonable person to result in a potential conflict of interest for the candidate if the candidate were to be elected to serve as a member of the executive board; and (Please respond to the statutory requirements cited above).

No Conflicts of interest

(b) disclose whether or not the candidate is a member in good standing for the purpose of this paragraph, a candidate shall not be deemed to be in "good standing" if the candidate has any unpaid or past due assessments or construction penalties that are required to be paid to the association. Please answer the question below by placing an X in the correct answer.

I am a member in "Good Standing" with the Association: Yes X **No** ___

2.) Experience: What skills do you feel you have that will contribute to the Board and Association? (Optional):

Nursing for over 26 years, Specializing in Alzheimer's. Responsible for hiring staff + day to day operation's of the unit. While working in nursing I also worked full time as Chief Union Negotiator for the Midwest. so I know contracts

3.) Why do you want to serve on the Board? (Optional):

I am a board member now and see the inside problem's. Transparency is a major concern, homeowners should have everything and know Everything. We need more involvement with Legacy and Airpark homeowner's association's.

I reside in a unit with, am married to, domestic partners with, or am related by blood, adoption or marriage within the third degree of consanguinity or affinity to another person who is also a member of the executive board or is an officer of the association. ___ **yes** X **no If yes, please explain on a separate sheet of paper).**

Note: Nothing cited in this disclosure is intended to prevent a potential candidate from running for the board of directors. Further, the Board will not prohibit a candidate from appearing on the ballot for failure to provide a disclosure statement, or for providing an inaccurate one or one with content that is defamatory, libelous or profane. Should a candidate not complete a disclosure statement, or should it contain content believed to be defamatory, libelous or profane, the board will note the fact in a statement to be included with election-related mailings. Further, a complaint may be filed with the Real Estate Division against the candidate who does not comply with the disclosure requirement.

Nominee Signature (Required): Amy Puzzo 3/22/2021

By signing this form I acknowledge that NRS 116.31034 requires a candidate to make all disclosures required by NRS 116.31034 in writing to the Association with his/her candidacy information, and that the disclosures must be distributed by the Association to each Member of the Association, with the ballot, in the manner established in the Bylaws of the Association, for that candidate to be eligible for office. By signing this form I agree to allow the Association to release any of the information I have supplied on this form.

Exhibit 4b
Pg 38

CANDIDACY DISCLOSURE STATEMENT

(Please Print or Type)

Name Ray Rozzo

Address 908 Lakeview DR (Street) Dayton (City) NV (State) 89403 (Zip)

Are you a unit owner? ..... ☒ Yes ☐ No

(NOTE: NRS 116.31034(1) states: Except as otherwise provided in subsection 5 of NRS 116.212, not later than the termination of any period of declarant's control, the units' owners shall elect an executive board of at least three members, all of whom must be units' owners.)

NRS 116.31034 (9) (a) & (b) and NRS 116.31034 (10) (a) & (b) states the following:

9. Each person who is nominated as a candidate for membership on the executive board pursuant to subsection 4 must:
   (a) Make a good faith effort to disclose any financial, business, professional or personal relationship or interest that would result or would appear to a reasonable person to result in a potential conflict of interest for the candidate if the candidate were to be elected to serve as a member of the executive board; and
   (b) Disclose whether the candidate is a member in good standing. For the purposes of this paragraph, a candidate shall not be deemed to be in "good standing" if the candidate has any unpaid and past due assessments or construction penalties that are required to be paid to the association.
10. Except as otherwise provided in subsections 11 and 12, unless a person is appointed by the declarant:
   (a) A person may not be a candidate for or member of the executive board or an officer of the association if:
      (1) The person resides in a unit with, is married to, is domestic partners with, or is related by blood, adoption or marriage within the third degree of consanguinity or affinity to another person who is also a member of the executive board or is an officer of the association;
      (2) The person stands to gain any personal profit or compensation of any kind from a matter before the executive board of the association; or
      (3) The person, the person's spouse or the person's parent or child, by blood, marriage or adoption, performs the duties of a community manager for that association.

   (b) A person may not be a candidate for or member of the executive board of a master association or an officer of that master association if the person, the person's spouse or the person's parent or child, by blood, marriage or adoption, performs the duties of a community manager for:
      (1) That master association; or
      (2) Any association that is subject to the governing documents of that master association.

Please use the following lines to respond to the statutory requirements pursuant to NRS 116.31034 (9) (a)

Attach additional sheets, if necessary: _____

_____

I am a candidate in good standing pursuant to NRS 116.31034(9) (b): ..... ☒ Yes ☐ No

If no, please explain: _____

_____

Please indicate all that apply to your relation to any board members, officer(s) of the association or community managers:

I am:

- ☐ Residing within the same unit as a board member or officer.
- ☐ Married to a board member or officer.
- ☐ Domestic partners with a board member or officer.
- ☒ None of the above

Related to a board member by:

- ☐ Blood
- ☐ Adoption
- ☐ Marriage within the third degree of consanguinity
- ☐ Affinity to another person
- ☒ None of the above

The candidate must make all disclosures required pursuant to this subsection in writing to the association with his or her candidacy information. Except as otherwise provided in this subsection, the association shall distribute the disclosures, on behalf of the candidate, to each member of the association with the ballot or, in the event ballots are not prepared and mailed pursuant to subsection 5, in the next regular mailing of the association. The association is not obligated to distribute any disclosure pursuant to this subsection if the disclosure contains information that is believed to be defamatory, libelous or profane.

Any additional information provided by the candidate for the executive board is voluntary and is not a requirement under NRS 116.31034.

Signature of candidate _____ Date 6/1/21

Revised 7/18/19

850

CICC0063

Exhibit #6
Pg 39

RECEIVED MAR 22 2021

Amy Puzzo
Candidacy Statement

I would like to take this time to thank all you homeowners for caring so much about our wonderful community! By this time you are aware that I have been a Director for 2 years now. Before I became a Director I attended and was involved with the homeowners meetings. I became a Director because I wanted to continue to help but in a different way not just attending meetings. I love our community and wanted Mr Lawrence's dream's to continue for our future grandchildren.

I have now seen the inside of the board and decided to run for a Director position again even though it has been very time consuming and very frustrating. I believe in Full transparency and following the laws and regulations of community and also NAC and NRS that are governed by the State of NV. The laws and regulations are in place to help and maintain associations in many different ways.

I have concerns for the safety of our association, especially with all the new growth we have been experiencing in our area and future growth throughout Dayton. I have been working and I am now done with looking into who owns the streets, common area's to make sure we have the legal title that has been deeded to us throughout the years of different development stages.

I now know the problems and I am hoping that with your support we all can fix them and have the transparency that everyone should have and know.

Thank You for your support

Amy Puzzo

Exhibit #6
Pg 40

DAYTON VALLEY COMMNITY ASSOCIATION

Candidacy Disclosure Statement

This form is provided for Homeowners who wish to run for the Board of Directors (you may nominate yourself). You must return this form to us no later than **March 24, 2021 by 5:00 PM.** The official meeting notice advising the exact date, time and location of the Election meeting will be mailed to all homeowners eligible to vote at a later date. There are seven (7) seats on the Board to fill.

NAME OF NOMINEE: ROGER ROCHA (I AM SELF NOMINATTING)

ARE YOU A HOMEOWNER IN THE ASSOCIATION STATED ABOVE? YES NO

Per NRS 116.31034 (5) (a) and (b), please complete the following information regarding your candidacy. Please print your responses.

1.) Each person whose name is placed on the ballot as a candidate for a member of the executive Board must:

(a) Make a good faith effort to disclose any financial, business, professional or personal relationship or interest that would result or would appear to a reasonable person to result in a potential conflict of interest for the candidate if the candidate were to be elected to serve as a member of the executive board; and (Please respond to the statutory requirements cited above).

YES.

(b) disclose whether or not the candidate is a member in good standing for the purpose of this paragraph, a candidate shall not be deemed to be in "good standing" if the candidate has any unpaid or past due assessments or construction penalties that are required to be paid to the association. Please answer the question below by placing an X in the correct answer.

I am a member in "Good Standing" with the Association: Yes X **No** ___

2.) Experience: What skills do you feel you have that will contribute to the Board and Association? (Optional):

3.) Why do you want to serve on the Board? (Optional):

AS A RESIDENT I FEEL AN OBLIGATION TO BE INFORMED OF THE GUIDELINES WE MUST ALL ABIDE BY AND HOW OUR RESOURCES ARE MANAGED.

I reside in a unit with, am married to, domestic partners with, or am related by blood, adoption or marriage within the third degree of consanguinity or affinity to another person who is also a member of the executive board or is an officer of the association. ___ yes ___ no If yes, please explain on a separate sheet of paper).

Note: Nothing cited in this disclosure is intended to prevent a potential candidate from running for the board of directors. Further, the Board will not prohibit a candidate from appearing on the ballot for failure to provide a disclosure statement, or for providing an inaccurate one or one with content that is defamatory, libelous or profane. Should a candidate not complete a disclosure statement, or should it contain content believed to be defamatory, libelous or profane, the board will note the fact in a statement to be included with election-related mailings. Further, a complaint may be filed with the Real Estate Division against the candidate who does not comply with the disclosure requirement.

Nominee Signature (Required): _____

By signing this form I acknowledge that NRS 116.31034 requires a candidate to make all disclosures required by NRS 116.31034 in writing to the Association with his/her candidacy information, and that the disclosures must be distributed by the Association to each Member of the Association, with the ballot, in the manner established in the Bylaws of the Association, for that candidate to be eligible for office. By signing this form I agree to allow the Association to release any of the information I have supplied on this form.

Exhibit #6
Pg 41

CANDIDACY DISCLOSURE STATEMENT

(Please Print or Type)

Name ROGER ROCHA

Address 673 ST. ANDREWS (Street) DAYTON (City) NV (State) 89403 (Zip)

Are you a unit owner? ..... ☒ Yes ☐ No

(NOTE: NRS 116.31034(1) states: Except as otherwise provided in subsection 5 of NRS 116.212, not later than the termination of any period of declarant's control, the units' owners shall elect an executive board of at least three members, all of whom must be units' owners.)

NRS 116.31034 (9) (a) & (b) and NRS 116.31034 (10) (a) & (b) states the following:

9. Each person who is nominated as a candidate for membership on the executive board pursuant to subsection 4 must:
   (a) Make a good faith effort to disclose any financial, business, professional or personal relationship or interest that would result or would appear to a reasonable person to result in a potential conflict of interest for the candidate if the candidate were to be elected to serve as a member of the executive board; and
   (b) Disclose whether the candidate is a member in good standing. For the purposes of this paragraph, a candidate shall not be deemed to be in "good standing" if the candidate has any unpaid and past due assessments or construction penalties that are required to be paid to the association.
10. Except as otherwise provided in subsections 11 and 12, unless a person is appointed by the declarant:
   (a) A person may not be a candidate for or member of the executive board or an officer of the association if:
      (1) The person resides in a unit with, is married to, is domestic partners with, or is related by blood, adoption or marriage within the third degree of consanguinity or affinity to another person who is also a member of the executive board or is an officer of the association;
      (2) The person stands to gain any personal profit or compensation of any kind from a matter before the executive board of the association; or
      (3) The person, the person's spouse or the person's parent or child, by blood, marriage or adoption, performs the duties of a community manager for that association.

   (b) A person may not be a candidate for or member of the executive board of a master association or an officer of that master association if the person, the person's spouse or the person's parent or child, by blood, marriage or adoption, performs the duties of a community manager for:
      (1) That master association; or
      (2) Any association that is subject to the governing documents of that master association.

Please use the following lines to respond to the statutory requirements pursuant to NRS 116.31034 (9) (a)

Attach additional sheets, if necessary: _____

_____

I am a candidate in good standing pursuant to NRS 116.31034(9) (b): ..... ☒ Yes ☐ No

If no, please explain: _____

_____

Please indicate all that apply to your relation to any board members, officer(s) of the association or community managers:

I am:

- ☐ Residing within the same unit as a board member or officer.
- ☐ Married to a board member or officer.
- ☐ Domestic partners with a board member or officer.
- ☒ None of the above

Related to a board member by:

- ☐ Blood
- ☐ Adoption
- ☐ Marriage within the third degree of consanguinity
- ☐ Affinity to another person
- ☒ None of the above

The candidate must make all disclosures required pursuant to this subsection in writing to the association with his or her candidacy information. Except as otherwise provided in this subsection, the association shall distribute the disclosures, on behalf of the candidate, to each member of the association with the ballot or, in the event ballots are not prepared and mailed pursuant to subsection 5, in the next regular mailing of the association. The association is not obligated to distribute any disclosure pursuant to this subsection if the disclosure contains information that is believed to be defamatory, libelous or profane.

Any additional information provided by the candidate for the executive board is voluntary and is not a requirement under NRS 116.31034.

Signature of candidate

5/26/2021
Date

Revised 7/18/19

850

Exhibit #6
Pg 42

ROGER ROCHA
NO STATEMENT
SUBMITTED

Exhibit #6
Pg 43

DAYTON VALLEY COMMNITY ASSOCIATION

9874888-595-3-4

Candidacy Disclosure Statement

s form is provided for Homeowners who wish to run for the Board of Directors (you may nominate yourself). You must return this form to us no later than **March 24, 2021 by 5:00 PM.** The official meeting notice advising the exact date, time and location of the Election meeting will be mailed to all homeowners eligible to vote at a later date. There are seven (7) seats on the Board to fill.

NAME OF NOMINEE: Steve Simon.

ARE YOU A HOMEOWNER IN THE ASSOCIATION STATED ABOVE? (YES) NO

Per NRS 116.31034 (5) (a) and (b), please complete the following information regarding your candidacy. Please print your responses.

1.) Each person whose name is placed on the ballot as a candidate for a member of the executive Board must:

(a) Make a good faith effort to disclose any financial, business, professional or personal relationship or interest that would result or would appear to a reasonable person to result in a potential conflict of interest for the candidate if the candidate were to be elected to serve as a member of the executive board; and (Please respond to the statutory requirements cited above).

none

(b) disclose whether or not the candidate is a member in good standing for the purpose of this paragraph, a candidate shall not be deemed to be in "good standing" if the candidate has any unpaid or past due assessments or construction penalties that are required to be paid to the association. Please answer the question below by placing an X in the correct answer.

I am a member in "Good Standing" with the Association: Yes X **No** ___

2.) Experience: What skills do you feel you have that will contribute to the Board and Association? (Optional):

Ex Small business owner

3.) Why do you want to serve on the Board? (Optional):

Concerned home owner

I reside in a unit with, am married to, domestic partners with, or am related by blood, adoption or marriage within the third degree of consanguinity or affinity to another person who is also a member of the executive board or is an officer of the association. ___ **yes** X **no If yes, please explain on a separate sheet of paper).**

Note: Nothing cited in this disclosure is intended to prevent a potential candidate from running for the board of directors. Further, the Board will not prohibit a candidate from appearing on the ballot for failure to provide a disclosure statement, or for providing an inaccurate one or one with content that is defamatory, libelous or profane. Should a candidate not complete a disclosure statement, or should it contain content believed to be defamatory, libelous or profane, the board will note the fact in a statement to be included with election-related mailings. Further, a complaint may be filed with the Real Estate Division against the candidate who does not comply with the disclosure requirement.

Nominee Signature (Required): _____

By signing this form I acknowledge that NRS 116.31034 requires a candidate to make all disclosures required by NRS 116.31034 in writing to the Association with his/her candidacy information, and that the disclosures must be distributed by the Association to each Member of the Association, with the ballot, in the manner established in the Bylaws of the Association, for that candidate to be eligible for office. By signing this form I agree to allow the Association to release any of the information I have supplied on this form.

9874888 8759FCMP-2

Exhibit #6
Pg 44

STEVE SIMONI MISSING CANDIDATE DISCLOSURE PAGE

Exhibit #6
Pg 45

STEVE SIMONI
NO STATEMENT
SUBMITTED

Exhibit #6
Pg 46

DAYTON VALLEY COMMNITY ASSOCIATION

Candidacy Disclosure Statement

This form is provided for Homeowners who wish to run for the Board of Directors (you may nominate yourself). You must return this form to us no later than **March 24, 2021 by 5:00 PM.** The official meeting notice advising the exact date, time and location of the Election meeting will be mailed to all homeowners eligible to vote at a later date. There are seven (7) seats on the Board to fill.

NAME OF NOMINEE: Rich Wilde

ARE YOU A HOMEOWNER IN THE ASSOCIATION STATED ABOVE? _____ _____

(YES) NO

Per NRS 116.31034 (5) (a) and (b), please complete the following information regarding your candidacy. Please print your responses.

1.) Each person whose name is placed on the ballot as a candidate for a member of the executive Board must:

(a) Make a good faith effort to disclose any financial, business, professional or personal relationship or interest that would result or would appear to a reasonable person to result in a potential conflict of interest for the candidate if the candidate were to be elected to serve as a member of the executive board; and (Please respond to the statutory requirements cited above).

_____

_____

_____

(b) disclose whether or not the candidate is a member in good standing for the purpose of this paragraph, a candidate shall not be deemed to be in "good standing" if the candidate has any unpaid or past due assessments or construction penalties that are required to be paid to the association. Please answer the question below by placing an X in the correct answer.

I am a member in "Good Standing" with the Association: Yes ✓ **No** ____

2.) Experience: What skills do you feel you have that will contribute to the Board and Association? (Optional):

Business Management with Large and small Corporations

_____

3.) Why do you want to serve on the Board? (Optional):

_____

_____

_____

I reside in a unit with, am married to, domestic partners with, or am related by blood, adoption or marriage within the third degree of consanguinity or affinity to another person who is also a member of the executive board or is an officer of the association. ____ yes ____ no If yes, please explain on a separate sheet of paper).

Note: Nothing cited in this disclosure is intended to prevent a potential candidate from running for the board of directors. Further, the Board will not prohibit a candidate from appearing on the ballot for failure to provide a disclosure statement, or for providing an inaccurate one or one with content that is defamatory, libelous or profane. Should a candidate not complete a disclosure statement, or should it contain content believed to be defamatory, libelous or profane, the board will note the fact in a statement to be included with election-related mailings. Further, a complaint may be filed with the Real Estate Division against the candidate who does not comply with the disclosure requirement.

Nominee Signature (Required): _____

By signing this form I acknowledge that NRS 116.31034 requires a candidate to make all disclosures required by NRS 116.31034 in writing to the Association with his/her candidacy information, and that the disclosures must be distributed by the Association to each Member of the Association, with the ballot, in the manner established in the Bylaws of the Association, for that candidate to be eligible for office. By signing this form I agree to allow the Association to release any of the information I have supplied on this form.

Exhibit #6
Pg 47 03

CANDIDACY DISCLOSURE STATEMENT

(Please Print or Type)

Name Richard Wilde

Address 448 La Costa Circle (Street) Dayton (City) NV (State) 89403 (Zip)

Are you a unit owner? ..... ☒ Yes ☐ No

(NOTE: NRS 116.31034(1) states: Except as otherwise provided in subsection 5 of NRS 116.212, not later than the termination of any period of declarant's control, the units' owners shall elect an executive board of at least three members, all of whom must be units' owners.)

NRS 116.31034 (9) (a) & (b) and NRS 116.31034 (10) (a) & (b) states the following:

9. Each person who is nominated as a candidate for membership on the executive board pursuant to subsection 4 must:
   (a) Make a good faith effort to disclose any financial, business, professional or personal relationship or interest that would result or would appear to a reasonable person to result in a potential conflict of interest for the candidate if the candidate were to be elected to serve as a member of the executive board; and
   (b) Disclose whether the candidate is a member in good standing. For the purposes of this paragraph, a candidate shall not be deemed to be in "good standing" if the candidate has any unpaid and past due assessments or construction penalties that are required to be paid to the association.
10. Except as otherwise provided in subsections 11 and 12, unless a person is appointed by the declarant:
   (a) A person may not be a candidate for or member of the executive board or an officer of the association if:
      (1) The person resides in a unit with, is married to, is domestic partners with, or is related by blood, adoption or marriage within the third degree of consanguinity or affinity to another person who is also a member of the executive board or is an officer of the association;
      (2) The person stands to gain any personal profit or compensation of any kind from a matter before the executive board of the association; or
      (3) The person, the person's spouse or the person's parent or child, by blood, marriage or adoption, performs the duties of a community manager for that association.

   (b) A person may not be a candidate for or member of the executive board of a master association or an officer of that master association if the person, the person's spouse or the person's parent or child, by blood, marriage or adoption, performs the duties of a community manager for:
      (1) That master association; or
      (2) Any association that is subject to the governing documents of that master association.

Please use the following lines to respond to the statutory requirements pursuant to NRS 116.31034 (9) (a)

Attach additional sheets, if necessary: _____

I am a candidate in good standing pursuant to NRS 116.31034(9) (b): ..... ☒ Yes ☐ No

If no, please explain: _____

Please indicate all that apply to your relation to any board members, officer(s) of the association or community managers:

I am:

- ☐ Residing within the same unit as a board member or officer.
- ☐ Married to a board member or officer.
- ☐ Domestic partners with a board member or officer.
- ☒ **None of the above**

Related to a board member by:

- ☐ Blood
- ☐ Adoption
- ☐ Marriage within the third degree of consanguinity
- ☐ Affinity to another person
- ☒ **None of the above**

The candidate must make all disclosures required pursuant to this subsection in writing to the association with his or her candidacy information. Except as otherwise provided in this subsection, the association shall distribute the disclosures, on behalf of the candidate, to each member of the association with the ballot or, in the event ballots are not prepared and mailed pursuant to subsection 5, in the next regular mailing of the association. The association is not obligated to distribute any disclosure pursuant to this subsection if the disclosure contains information that is believed to be defamatory, libelous or profane.

Any additional information provided by the candidate for the executive board is voluntary and is not a requirement under NRS 116.31034.

Richard Wilde
Signature of candidate

May 28, 2021
Date

Revised 7/18/19

850

Exhibit 46
Pg 48

RICH WILDE
NO STATEMENT
SUBMITTED

Case 2021-761

Allegation #1

Exhibit #7

Exhibit #4
Pg 1

Lyon County Property Appraiser



016-361-35
/parcel/01636135

Palmer Gatehouse (Guard house) + Entrance Gate + Street

0
DAYTON VALLEY, NV

Owners
TOUR SPECS GOLF MANAGEMENT LLC

Mailing Address
681 ST ANDREW DR
DAYTON, NV 89403-0000

Legal Description
18/19-16-22 /PAR 3
Created from split of parcel # 016-361-26 TWN/BLK: 16 RANGE: 22 ACRES: 280.59
POR. SECTIONS 17/18/19-16-22; PAR 1A-1 PM #182901 TWN/BLK: 16 RANGE: 22 ACRES: 219.72
Created from split of Parcel # 016-361-31 TWN/BLK: 16 RANGE: 22 ACRES: 219.72
FR SW4; FR E2 SEC/LOT: 18 TWN/BLK: 16 RANGE: 22
FR N2 SEC/LOT: 19 TWN/BLK: 16 RANGE: 22
PARCEL 3 (REMAINDER) OF PM #232542 TWN/BLK: 16 RANGE: 22 ACRES: 146.63

DOR Code: 450 - Golf Course
Neighborhood Code: NONE - NONE

Lyon County Nevada

Exhibit #7
Pg 2

Parcel 016-361-35

Owners

TOUR SPECS GOLF MANAGEMENT LLC
681 ST ANDREW DR
DAYTON, NV 89403-0000

Parcel Summary

Location	0 DAYTON VALLEY, NV
Use Code	450: Golf Course
Tax District	8.8: Central Lyon Fire District
Map Parcel	PAR 3
Plat Maps	016-36.1.pdf (720kb) 016-36.2.pdf (498kb) 016-36.3.pdf (405kb)
Map Documents	PAR182901 PAR232542

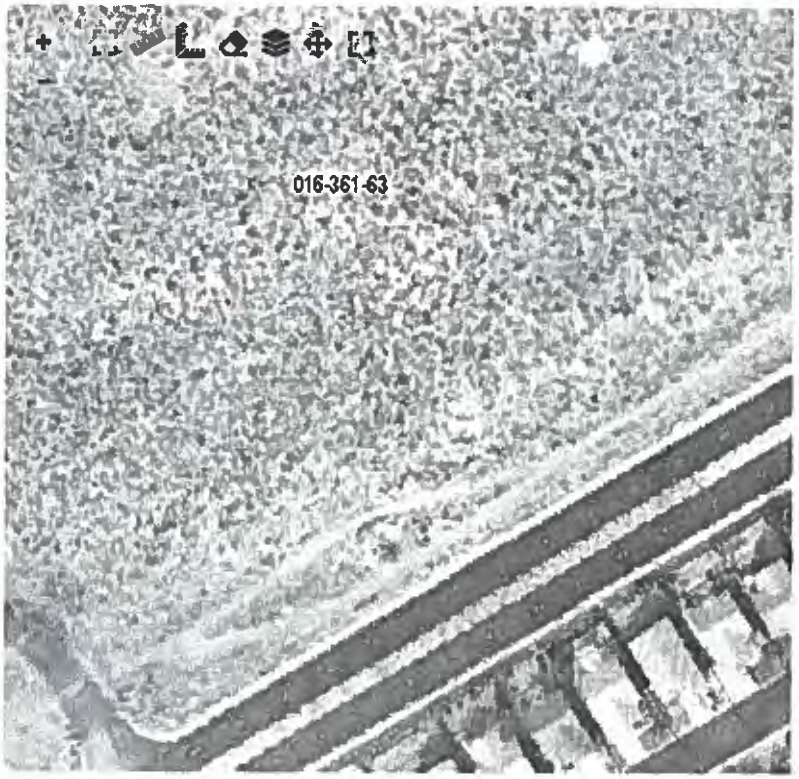

Go to full page interactive GIS

Value History

	2021	2020	2019	2018	2017	2016	2015
Total Building Value	$0	$790,117	$790,117	$790,117	$790,117	$790,117	$790,117
Total Extra Features Value	$2,015,708	$0	$0	$0	$0	$0	$0
Total Land Value	$130,207	$130,200	$130,200	$130,200	$130,200	$130,200	$130,200
Taxable Value	$2,145,915	$920,317	$920,317	$920,317	$920,317	$920,317	$920,317
Net Exemptions Value	$0	$0	$0	$0	$0	$0	$0
Net Assessed Value	$751,070	$322,111	$322,111	$322,111	$322,111	$322,111	$322,111
New Improvements	$0	$0	$0	$0	$0	$0	$0
New Land	$0	$0	$0	$0	$0	$0	$0

Document/Transfer/Sales History

Official Record	Date	Type	M/I	Def Value	Ownership
626936	2020-12-17	RE-RECORDED DOCUMENT	Vacant	$0	Grantee: TOUR SPECS GOLF MANAGEMENT LLC
626921	2020-12-16	GRANT BARGAIN SALE DEED	Improved	$1,165,000	Grantee: TOUR SPECS GOLF MANAGEMENT LLC

Exhibit #7 Pg 3

Official Record	Date	Type	V/I	Del Value	Ownership
458577	2010-04-06	GRANT BARGAIN SALE DEED	Improved	$750,000	Grantor: THREE-J INC Grantee: DAYTON VALLEY GOLF COURSE LLC
260136	2001-04-25	EASEMENT/RIGHT-OF-WAY DEED	Vacant	$0	Grantee: DAYTON VALLEY INVESTORS LLC
255373	2000-12-12	GRANT BARGAIN SALE DEED	Vacant	$2,500,000	Grantor: COMLAW NO 445 LIMITED Grantee: THREE-J INC
232542	1999-04-19	PARCEL MAP	Vacant	$0	Grantee: COMLAW NO 445 LIMITED
217292	1998-04-09	GRANT BARGAIN SALE DEED	Vacant	$0	Grantee: COMLAW NO 445 LIMITED
182901	1995-06-07	PARCEL MAP	Vacant	$0	Grantee: JOHN LAWRENCE (NEVADA) INC
139969	1991-03-05	EASEMENT/RIGHT-OF-WAY DEED	Vacant	$0	Grantee: JOHN LAWRENCE (NEVADA) INC
138203	1990-12-10	RELEASE DEFERRED TAX LIEN	Vacant	$0	Grantee: JOHN LAWRENCE (NEVADA) INC
124613	1989-05-24	BOUNDARY ADJUSTMENT MAP	Vacant	$0	
111626	1987-11-17	GREEN BELT APPROVED	Vacant	$0	
105478	1987-02-13	GRANT BARGAIN SALE DEED	Vacant	$0	
102038	1986-09-12	PARCEL MAP	Vacant	$0	
92698	1985-05-15	GREEN BELT APPROVED	Vacant	$0	
90464	1984-12-31	GRANT BARGAIN SALE DEED	Vacant	$0	
90460	1984-12-31	GRANT BARGAIN SALE DEED	Vacant	$0	
90459	1984-12-31	EXECUTORS/ADMINISTRATORS DEED	Vacant	$0	
90279	1984-12-17	ESTATE/DECREE OF DISTRIBUTION	Vacant	$0	

Buildings

None

Extra Features

Code	Description	Length	Width	Units	Unit Price	AYB	Repl Cost	% Good Condition	Depreciated Value	Notes
HOLE3	GOLF HOLE PRIVATE CL3 1/19			15.00	$166,892	1990	$2,503,380	54%	$1,339,308	
GBRIDGES	GOLF BRIDGE TUNNEL PER HOLE/CLASS 1/19			2.00	$14,732	1990	$29,464	54%	$15,763	
LAKES	PER SQ FT 1/19			928214.00	$1	1990	$1,197,396	54%	$640,607	
SHEDS3	SHEDS TYPE 1 1=DIRT 2,3=CONCRETE 1/19	18	28	504.00	$19	1990	$9,329	54%	$4,991	
SHEDS3	SHEDS TYPE 1 1=DIRT 2,3=CONCRETE 1/19			256.00	$21	1994	$5,372	60%	$3,196	

Code	Description	Length	Width	Units	Unit Price	AYB	Repl Cost	% Good Condition	Depreciated Value*	Notes
FIXT 4	FIXTURES FOR CLASS 4 BLDGS 1/19			8.00	$2,488	1994	$19,904	60%	$11,843	

*RCNLD: Replacement Cost New, Less Depreciation

Exhibit #7
Pg 4

Personal Property

None

Land Lines

Code	Description	Zone	Front	Depth	Land Units	Unit Type	Acreage	Total Adj	Value	Notes
450	Golf Course	NR1			146.63	RATE	146.63	0.74	$130,207	

Disclaimer

All parcel data on this page is for use by the Lyon County Property Appraiser for assessment purposes only. The summary data on this page may not be a complete representation of the parcel or of the improvements thereon. Building information, including unit counts and number of permitted units, should be verified with the appropriate building and planning agencies. Zoning information should be verified with the appropriate planning agency. All parcels are reappraised each year. This is a true and accurate copy of the records of the Lyon County Assessor's Office as of May 07, 2021.

Home | Accessibility | ©2020 GSA, Government Software Assurance Corp

Case 2021-761

Allegation #1

Exhibit #8

Exhibit #8
Pg 1

Lyon County Property Appraiser



016-361-70 Palmer Exit Gated Street

/parcel/01636170

101 PALMER DR
DAYTON VALLEY, NV

Owners
TOUR SPECS GOLF MANAGEMENT LLC

Mailing Address
681 ST ANDREW DR
DAYTON, NV 89403-0000

Legal Description
17/18-16-22
Created from split of Parcel # 016-361-23 TWN/BLK: 16
RANGE: 22 ACRES: 240.72
FR W2 SEC/LOT: 17 TWN/BLK: 16 RANGE: 22
FR E2 E2 SE4 NE4 SEC/LOT: 18 TWN/BLK: 16 RANGE: 22
PARCEL 3 OF PM #232541 TWN/BLK: 16 RANGE: 22
ACRES: 57.75
Changed from Parcel # 016-361-39
FR W2 SEC/LOT: 17 TWN/BLK: 16 RANGE: 22
FR E2 SE4 NE4 PARCEL 3 ADJUSTED BA 259102
SEC/LOT: 18 TWN/BLK: 16 RANGE: 22 ACRES: 57.67
Changed from Parcel # 016-361-43

DOR Code: 450 - Golf Course
Neighborhood Code: NONE - NONE

Parcel 3B Adjusted from BA 342251 ACRES: 61.41
Changed from Parcel # 016-361-58 adj par 1 SEC/LOT:
17 TWN/BLK: 16 RANGE: 22 ACRES: 56.13

Exhibit #8
Pg 2

Lyon County
Nevada

Exhibit # 8
Pg 3

Parcel 016-361-70

Owners

TOUR SPECS GOLF MANAGEMENT LLC
681 ST ANDREW DR
DAYTON, NV 89403-0000

Parcel Summary

Location	101 PALMER DR DAYTON VALLEY, NV
Use Code	450: Golf Course
Tax District	8.8: Central Lyon Fire District
Map Parcel	ADJ PAR 1
Plat Map	016-36.1.pdf (720kb) 016-36.2.pdf (498kb) 016-36.3.pdf (405kb)
Map Documents	PAR102038 PAR232541 BAM259102 BAM551567



Go to full page interactive GIS

Additional Site Addresses

900 LAKEVIEW DR
97 PALMER DR

Value History

Total Building Value	$2,254,689	$165,014	$165,014	$165,014	$165,014	$165,014	$171,431
Total Extra Features Value	$573,012	$0	$0	$0	$0	$0	$0
Total Land Value	$49,843	$49,857	$49,857	$49,857	$49,843	$49,843	$54,543
Taxable Value	$2,877,544	$214,871	$214,871	$214,871	$214,857	$214,857	$225,974
Net Exemptions Value	$0	$0	$0	$0	$0	$0	$0
Net Assessed Value	$1,007,140	$75,205	$75,205	$75,205	$75,200	$75,200	$79,091
New Improvements	$0	$0	$0	$0	$0	$0	$0
New Land	$0	$0	$0	$0	$0	$0	$0

Document/Transfer/Sales History

Official Record	Date	Type	V/I	Sale Value	Ownership
626936	2020-12-17	RE-RECORDED DOCUMENT	Improved	$0	Grantee: TOUR SPECS GOLF MANAGEMENT LLC
626921	2020-12-16	GRANT BARGAIN SALE DEED	Improved	$1,165,000	Grantee: TOUR SPECS GOLF MANAGEMENT LLC

Exhibit #8 Pg 4

Official Record	Date	Type	V/I	Del Value	Ownership
551568	2016-06-10	BOUNDARY ADJUSTMENT DEED	Vacant	$0	Grantee: DAYTON VALLEY GOLF COURSE LLC
551567	2016-06-10	BOUNDARY ADJUSTMENT MAP	Vacant	$0	Grantee: DAYTON VALLEY GOLF COURSE LLC
551566	2016-06-10	MISC DOC/OTHER	Vacant	$0	Grantee: DAYTON VALLEY GOLF COURSE LLC
486626	2012-01-24	MISC DOC/OTHER	Vacant	$0	Grantee: DAYTON VALLEY GOLF COURSE LLC
486625	2012-01-24	DEED	Vacant	$0	Grantee: DAYTON VALLEY GOLF COURSE LLC
458577	2010-05-04	GRANT BARGAIN SALE DEED	Vacant	$750,000	Grantor: THREE-J INC Grantee: DAYTON VALLEY GOLF COURSE LLC
377318	2006-03-14	CORRECTION DEED/DOCUMENT	Vacant	$0	Grantee: THREE-J INC
342253	2005-02-04	BOUNDARY ADJUSTMENT DEED	Vacant	$0	Grantee: THREE-J INC
342251	2005-02-04	BOUNDARY ADJUSTMENT MAP	Vacant	$0	Grantee: THREE-J INC ET AL
259104	2001-03-30	QUITCLAIM DEED	Vacant	$0	Grantee: THREE-J INC
259102	2001-03-30	BOUNDARY ADJUSTMENT MAP	Vacant	$0	Grantee: THREE-J INC
255373	2000-12-12	GRANT BARGAIN SALE DEED	Vacant	$2,500,000	Grantor: COMLAW NO 445 LIMITED Grantee: THREE-J INC
232541	1999-04-19	PARCEL MAP	Vacant	$0	Grantee: COMLAW NO 445 LIMITED
217292	1998-04-09	GRANT BARGAIN SALE DEED	Vacant	$0	Grantee: COMLAW NO 445 LIMITED
140195	1991-03-18	RE-RECORDED DOCUMENT	Vacant	$0	
140107	1991-03-12	RELEASE DEFERRED TAX LIEN	Vacant	$0	
111627	1987-11-17	GREEN BELT APPROVED	Vacant	$0	
105478	1987-02-13	GRANT BARGAIN SALE DEED	Vacant	$0	
102038	1986-09-12	PARCEL MAP	Vacant	$0	
92698	1985-05-15	GREEN BELT APPROVED	Vacant	$0	
90464	1984-12-31	GRANT BARGAIN SALE DEED	Vacant	$0	
90460	1984-12-31	GRANT BARGAIN SALE DEED	Vacant	$0	
90459	1984-12-31	EXECUTORS/ADMINISTRATORS DEED	Vacant	$0	
90279	1984-12-17	ESTATE/DECREE OF DISTRIBUTION	Vacant	$0	

Buildings

Building # 1, Section # 1, CLUB HOUSE 3600SF, Clubhouse

Type	Model	Square Feet	Repl Cost New	YrBlt	WAY	Other % Dpr	Normal % Dpr	% Cond	Value
COMM	311	3600	$344,484	1991	1991	0.00%	45.00%	55.00%	$189,466

Structural Elements

Type	Description	Code	Details
EW_C	EXT WALL-Commercial	887	Stud Walls - Hardboard Lap Siding

CICC0083

Type	Description	Code	Details
HEAT_C	HEAT-Commercial	611	Package Unit
ST	Number of Stories (COMM)	1.00	
WH	Average Wall Height (COMM)	12.00	

Exhibit # 8
Pg 5

Subareas

Type	Gross Area	Percent of Base	Adjusted Area
GBA	3,600	100%	3,600

Building # 2, Section # 1, COUNTRY CLUB, Country Club

Type	Model	Square Feet	Repl Cost New	YrBlt	WAY	Other % Dpr	Normal % Dpr	% Cond	Value
COMM	314	14675	$2,717,399	2005	2005	0.00%	24.00%	76.00%	$2,065,223

Structural Elements

Type	Description	Code	Details
EW_C	EXT WALL-Commercial	892	Stud Walls - Stucco On Wire Or Sheat
EW_C	EXT WALL-Commercial	887	Stud Walls - Hardboard Lap Siding
HEAT_C	HEAT-Commercial	611	Package Unit
ST	Number of Stories (COMM)	1.00	
WH	Average Wall Height (COMM)	12.00	
683	Sprinkler System Wet - Commercial	14675.00	

Subareas

Type	Gross Area	Percent of Base	Adjusted Area
GBA	14,675	100%	14,675

Extra Features

Code	Description	Length	Width	Units	Unit Price	AYB	Repl Cost	% Good Condition	Depreciated Value*	Notes
ASPH2	ASPHALT "FAIR" AND "GOOD" 1/19			63400.00	$1	1991	$87,492	55%	$48,121	
CONC G	CONCRETE "GOOD" 1350SF 1/19			1.00	$7,112	1991	$7,112	55%	$3,912	
SPR G	SPRINKLERS "GOOD" 5000SF 1/19			3.00	$5,290	1991	$15,870	55%	$8,729	
COLDSTOR1	WALKIN BOX 1=32 DG 2=5 3=-15 4=-45 1/19	17	17	289.00	$122	1991	$35,174	55%	$19,346	
DECK2	DECK 1=SOFT 2=REDWOOD 3=TREX 1/19			1620.00	$17	1991	$27,994	55%	$15,396	
CHLKTRB3	CH LINK W/TOP RAIL & BARB WIRE 1/19			1650.00	$20	1991	$33,792	55%	$18,586	

 Exhibit #8 Pg 6

Code	Description	Length	Width	Units	Unit Price	AYB	Repl Cost	% Good Condition	Depreciated Value*	Notes
SHEDS3	SHEDS TYPE 1 1=DIRT 2,3=CONCRETE 1/19			64.00	$31	2001	$1,979	70%	$1,385	
HOLE3	GOLF HOLE PRIVATE CL3 1/19			3.00	$166,892	1990	$500,676	54%	$267,862	
LAKES	PER SQ FT 1/19			67438.00	$1	1990	$86,995	54%	$46,542	
SHEDS1	SHEDS TYPE 1 1=DIRT 2,3=CONCRETE 1/19	14	6	84.00	$13	2000	$1,059	69%	$725	
SHEDS2	SHEDS TYPE 1 1=DIRT 2,3=CONCRETE 1/19	12	10	120.00	$20	2000	$2,374	69%	$1,626	
CONCRETE	CONCRETE OVER 1500 SQ FT 1/19	34	45	1530.00	$5	2000	$8,063	69%	$5,523	
SH T22	SHEDS TYPE 2 1=DIRT 2,3=CONCRETE 1/19	17	25	425.00	$13	1991	$5,700	55%	$3,135	
FNCBLK	CONC BLK FNC 1=4' 2=5' 3=6' 4=8' 1/19			65.00	$119	2005	$7,737	76%	$5,880	
ASPH4	ASPHALT "FAIR" AND "GOOD" 1/19			73500.00	$2	2005	$166,110	76%	$126,244	

*RCNLD: Replacement Cost New, Less Depreciation

Personal Property

Account	Secured/ Unsecured	Owner	Description
LY005519	Unsecured	DAYTON VALLEY GOLF COURSE LLC	LY - EQUIPMENT-LYON COUNTY

Land Lines

Code	Description	Zone	Front	Depth	Land Units	Unit Type	Acreage	Total Adj	Value	Notes
450	Golf Course	MULT			56.13	RATE	56.13	0.74	$49,843	Zoning: NR1,TC,E1

Disclaimer

All parcel data on this page is for use by the Lyon County Property Appraiser for assessment purposes only. The summary data on this page may not be a complete representation of the parcel or of the improvements thereon. Building information, including unit counts and number of permitted units, should be verified with the appropriate building and planning agencies. Zoning information should be verified with the appropriate planning agency. All parcels are reappraised each year. This is a true and accurate copy of the records of the Lyon County Assessor's Office as of May 07, 2021.

Home | Accessibility | ©2020 GSA, Government Software Assurance Corp

CICC0085

STATE OF NEVADA
DEPARTMENT OF BUSINESS AND INDUSTRY
REAL ESTATE DIVISION
3300 West Sahara Avenue, Suite 325, Las Vegas, NV 89102
(702) 486-4480 * Toll free: (877) 829-9907 * Fax: (702) 486-4520
E-mail: CICOmbudsman@red.nv.gov http://www.red.nv.gov

RECEIVED
JUL 20 2021
Dept of Business & Industry
NV Real Estate Division - LV MAIL

INTERVENTION AFFIDAVIT (Form 530)

Statements 1 through 4 cited below must be met prior to filing this Affidavit. **Please verify that you have met the requirements by initialing in each box.** As the aggrieved party, you:

1. Are filing this complaint not later than 1 year after you discovered or reasonably should have discovered the alleged violation. Date alleged violation took place: June 9, 2021
2. Have mailed to the Respondent's last known address **a certified letter, return receipt requested,** specifying in reasonable detail: all alleged violations, any actual damages suffered, and any corrective actions proposed. A copy of this letter and the certified return receipt from the post office must be attached to this form. *Any and all allegations included in the certified letter must also be included on this form.* Any allegation **not** indicated will **not** be considered by the Division.
3. Have provided the Respondent with at least 10 business days to correct the alleged violation(s) pursuant to the governing documents or NRS and NAC 116. All other reasonable efforts to resolve the allegation(s) must have failed prior to filing this Intervention Affidavit.
4. Have stated only one alleged violation per page and have included applicable attachments (Exhibits) behind each such page. It is advised that you make a copy of this package for yourself prior to submission.

Please indicate whether you have spoken to a staff representative from the Ombudsman's Office to understand which specific provision of NRS or NAC 116 may have been violated.

Yes ☐ **No** ☑ If yes, name: Not applicable

STATE OF NEVADA
COUNTY OF: LYON DATE: July 15, 2021

I, JOSEPH F. HUGHES, (Complainant), after being first duly sworn, state under penalty of perjury and based upon personal knowledge have been aggrieved by an alleged violation of Chapter 116 of the Nevada Revised Statutes, Nevada Administrative Code or the governing documents of the association.

1. The person or entity who committed the alleged violation and who was sent the required certified letter is (if multiple, list each Respondent):
   DENNIS DRURY (PRESIDENT), SANDRA MASS (VICE PRESIDENT), PAULA DARRAGH (SECRETARY), DOUG KREIE (TREASURER) DVCA BOARD
2. The Respondent or respondents role in the community:
   OFFICERS OF DAYTON VALLEY COMMUNITY ASSOCIATION BOARD OF DIRECTORS
3. The Homeowners Association involved in this Intervention Affidavit is:
   DAYTON VALLEY COMMUNITY ASSOCIATION
4. List the Association's Secretary of State (SOS) Business ID Number NV20141503953
   To locate SOS ID Number go to the Secretary of State website.

CICC0086

STATE OF NEVADA
DEPARTMENT OF BUSINESS AND INDUSTRY
REAL ESTATE DIVISION
3300 West Sahara Avenue, Suite 325, Las Vegas, NV 89102
(702) 486-4480 * Toll free: (877) 829-9907 * Fax: (702) 486-4520
E-mail: CICOmbudsman@red.nv.gov http://www.red.nv.gov

RECEIVED
JUL 20 2021
Dept of Business & Industry
NV Real Estate Division - LV MAIL

You are required to **state one** alleged violation, with a brief description, per page (reprint this page for each separate alleged violation). Each allegation must have its own supporting documentation (**Exhibit #1 for allegation #1**, and so on), which must be placed directly behind the allegation when submitting this package. ***Do not write "See Attached."*** **If *"See Attached"* is written in the sections below your complaint will not be processed.**

ALLEGED VIOLATION: (To the point, state the alleged violation.)

ALLEGED VIOLATION NUMBER: 1

NRS 116.3103 FAILURE TO EXCERCISE FIDUCIARY RESPONSIBILITY AND ACT IN THE BEST INTEREST OF THE MEMBERSHIP BY NOT PROPERLY REVIEWING CANDIDATE DISCLOSURE STATMENTS. ALLOWING A BOARD MEMBER TO MOTION FOR VOTE AND VOTE ON MATTER THAT BOARD MEMBER WAS DIRECTLY THE SUBJECT MATTER OF REVIEW OF THEIR OWN OMMISSIONS.

RECOMMENDED CORRECTIVE ACTION:

REMOVAL OR NULLIFCATION OF CANDIDATES OR VOTES (KEPLER & KREIE)
REMOVAL OF BOARD MEMBERS FOR WILLFULLY AND KNOWINGLY FAILING TO UPHOLD THEIR FIDUCIARY RESPONSIBILITIES TO THE ASSOCIATION.

SUPPORTING LAW AND/OR GOVERNING DOCUMENTS: (List the applicable laws and/or sections of governing documents.)

NRS 116.3103
NRS 116.31034, (9)(a), (10)

ATTACHMENTS: (List the types of documents included, i.e., budget, notices of violation, governing document provisions, etc. specific to the alleged violation cited above):

COPY OF CERTIFIED LETTER, RECEIPTS OF MAILING TO DVCA BOARD OF DIRECTORS
AUDIO OF 8/9/2021 BOARD MEETING, (THUMB DRIVE) AUDIO OF 1/27/2021 BOARD MEETING (THUMB DRIVE)
ELECTION PACKAGE (THE BALLOT BOX) SUPPORTING MULITPLE VIOLATIONS AS EXHIBITS CANDIDATE STATEMENT (KEPLER & KREIE)
BHARATH CHANDRA ADMIN VS. VISTANA CONDOMINIUM ASSOCIATION (THUMB DRIVE) FOR REFERENCE
COPY OF BALLOT, LETTER OF NOTICE, PROOF OF DELIVERY,

I have read the foregoing Affidavit consisting of 10 pages (including all additional attached pages), and it is true and correct to the best of my knowledge andbelief.

Signature of Complainant _____
Name JOSEPH F. HUGHES
Street Address 905 LAKEVIEW DR
City, State, Zip DAYTON, NV 89403
Phone (775) 230-6728

State of NV County of Lyon
Subscribed and sworn to before me
This 15th day of July 2021.

_____ NOTARY PUBLIC

ASHLEY COLE
NOTARY PUBLIC
STATE OF NEVADA
No. 17-4156-12 My Appt. Exp. Sept. 28, 2021

You can mail or hand-deliver the completed affidavit package to:
NEVADA REAL ESTATE DIVISION
OFFICE OF THE OMBUDSMAN
COMMON-INTEREST COMMUNITIES AND
CONDOMINIUM HOTELS PROGRAM
3300 W. SAHARA AVE., SUITE 325, LAS VEGAS, NEVADA 89102
Email and fax submissions will not be accepted
It is advised that you retain a copy of this packet for yourself prior to submission.

CICC0087

STATE OF NEVADA
DEPARTMENT OF BUSINESS AND INDUSTRY
REAL ESTATE DIVISION
3300 West Sahara Avenue, Suite 325, Las Vegas, NV 89102
(702) 486-4480 * Toll free: (877) 829-9907 * Fax: (702) 486-4520
E-mail: CICOmbudsman@red.nv.gov http://www.red.nv.gov

RECEIVED
JUL 20 2021
Dept of Business & Industry
NV Real Estate Division - LV MAIL

INTERVENTION AFFIDAVIT (Form 530)

Statements 1 through 4 cited below must be met prior to filing this Affidavit. **Please verify that you have met the requirements by initialing in each box.** As the aggrieved party, you:

1. Are filing this complaint not later than 1 year after you discovered or reasonably should have discovered the alleged violation. Date alleged violation took place: _____
2. Have mailed to the Respondent's last known address **a certified letter, return receipt requested,** specifying in reasonable detail: all alleged violations, any actual damages suffered, and any corrective actions proposed. A copy of this letter and the certified return receipt from the post office must be attached to this form. *Any and all allegations included in the certified letter must also be included on this form.* Any allegation **not** indicated will **not** be considered by the Division.
3. Have provided the Respondent with at least 10 business days to correct the alleged violation(s) pursuant to the governing documents or NRS and NAC 116. All other reasonable efforts to resolve the allegation(s) must have failed prior to filing this Intervention Affidavit.
4. Have stated only one alleged violation per page and have included applicable attachments (Exhibits) behind each such page. It is advised that you make a copy of this package for yourself prior to submission.

Please indicate whether you have spoken to a staff representative from the Ombudsman's Office to understand which specific provision of NRS or NAC 116 may have been violated.

Yes ☐ **No** ☒ If yes, name: _____

STATE OF NEVADA
COUNTY OF: LYON DATE: July 15, 2021

I, _____, (Complainant), after being first duly sworn, state under penalty of perjury and based upon personal knowledge have been aggrieved by an alleged violation of Chapter 116 of the Nevada Revised Statutes, Nevada Administrative Code or the governing documents of the association.

1. The person or entity who committed the alleged violation and who was sent the required certified letter is (if multiple, list each Respondent):

   _____

2. The Respondent or respondents role in the community:

   _____

3. The Homeowners Association involved in this Intervention Affidavit is:

   _____

4. List the Association's Secretary of State (SOS) Business ID Number _____

   To locate SOS ID Number go to the Secretary of State website.

CICC0088

STATE OF NEVADA
DEPARTMENT OF BUSINESS AND INDUSTRY
REAL ESTATE DIVISION
3300 West Sahara Avenue, Suite 325, Las Vegas, NV 89102
(702) 486-4480 * Toll free: (877) 829-9907 * Fax: (702) 486-4520
E-mail: CICOmbudsman@red.nv.gov http://www.red.nv.gov

RECEIVED
JUL 20 2021
Dept of Business & Industry
NV Real Estate Division - LV MAIL

You are required to **state one** alleged violation, with a brief description, per page (reprint this page for each separate alleged violation). Each allegation must have its own supporting documentation (**Exhibit #1 for allegation #1**, and so on), which must be placed directly behind the allegation when submitting this package. ***Do not write "See Attached."*** **If *"See Attached"* is written in the sections below your complaint will not be processed.**

ALLEGED VIOLATION: (To the point, state the alleged violation.)

ALLEGED VIOLATION NUMBER: 2

NRS 116.31034 (9), (a) 9. Each person who is nominated as a candidate for membership on the executive board pursuant to subsection 4 must:

(a) Make a good faith effort to disclose any financial, business, professional or personal relationship or interest that would result or would appear to a reasonable person to result in a potential conflict of interest for the candidate if the candidate were to be elected to serve as a member of the executive board

RECOMMENDED CORRECTIVE ACTION:

NULLIFY VOTES FOR CANDIDATES OR REMOVE FROM BALLOT AS THIS IS THE SECOND OPPORTUNITY THESE CANDIDATES HAD TO FILE A COMPLIANT CANDIDATE DISCLOSUE DOCUMENT. SECOND OPPORTUNITY FOR BOARD TO UNDERSTAND "REASONABLE PERSON" MEANS THE APPEARANCE IS A DISQUALIFIER FOR A CANDIDATE.

SUPPORTING LAW AND/OR GOVERNING DOCUMENTS: (List the applicable laws and/or sections of governing documents.)

NRS 116.31034 (9) (a),

ATTACHMENTS: (List the types of documents included, i.e., budget, notices of violation, governing document provisions, etc. specific to the alleged violation cited above):

CANDIDATATE DISCLOSURE DOCUMENTS COPIES FROM ELECTION PACKAGE. CANDIDATES KEPLER,KREIE (DUPLICATED EVIDENCE FROM VIOLATION 1)
Bhanish Chandra Admin vs Vistana Condominium Assoc. (THUMB DRIVE)
AUDIO OF JANUARY 27, 2021 DVCA BOARD MEETING WITH KREIE FAILING TO DISCLOSE INVESTMENT IN GOLF COURSE AND VOTING TO CONTINUE TO PAY FOR GOLF COURSE LANDSCAPING TO BENEFIT HIS INVESTMENT 45:20 MARK OF AUDIO
COPY OF 1/27/21 BOARD MEETING MINUTES

I have read the foregoing Affidavit consisting of 7 pages (including all additional attached pages), and it is true and correct to the best of my knowledge and belief.

Signature of Complainant _____
Name JOSEPH F. HUGHES
Street Address 905 LAKEVIEW DR
City, State, Zip DAYTON, NV 89403
Phone (775) 230-6728

State of NV County of Lyon
Subscribed and sworn to before me
This 15th day of July 2021.

_____ NOTARY PUBLIC

ASHLEY COLE
NOTARY PUBLIC
STATE OF NEVADA
No. 17-4166-12 My Appt. Exp. Sept. 28, 2021

You can mail or hand-deliver the completed affidavit package to:
NEVADA REAL ESTATE DIVISION
OFFICE OF THE OMBUDSMAN
COMMON-INTEREST COMMUNITIES AND
CONDOMINIUM HOTELS PROGRAM
3300 W. SAHARA AVE., SUITE 325, LAS VEGAS, NEVADA 89102
Email and fax submissions will not be accepted
It is advised that you retain a copy of this packet for yourself prior to submission.

STATE OF NEVADA
DEPARTMENT OF BUSINESS AND INDUSTRY
REAL ESTATE DIVISION
3300 West Sahara Avenue, Suite 325, Las Vegas, NV 89102
(702) 486-4480 * Toll free: (877) 829-9907 * Fax: (702) 486-4520
E-mail: CICOmbudsman@red.nv.gov http://www.red.nv.gov

RECEIVED
JUL 20 2021
Dept of Business & Industry
NV Real Estate Division - LV MAIL

INTERVENTION AFFIDAVIT (Form 530)

Statements 1 through 4 cited below must be met prior to filing this Affidavit. **Please verify that you have met the requirements by initialing in each box.** As the aggrieved party, you:

1. Are filing this complaint not later than 1 year after you discovered or reasonably should have discovered the alleged violation. Date alleged violation took place: _____
2. Have mailed to the Respondent's last known address **a certified letter, return receipt requested,** specifying in reasonable detail: all alleged violations, any actual damages suffered, and any corrective actions proposed. A copy of this letter and the certified return receipt from the post office must be attached to this form. *Any and all allegations included in the certified letter must also be included on this form.* Any allegation **not** indicated will **not** be considered by the Division.
3. Have provided the Respondent with at least 10 business days to correct the alleged violation(s) pursuant to the governing documents or NRS and NAC 116. All other reasonable efforts to resolve the allegation(s) must have failed prior to filing this Intervention Affidavit.
4. Have stated only one alleged violation per page and have included applicable attachments (Exhibits) behind each such page. It is advised that you make a copy of this package for yourself prior to submission.

Please indicate whether you have spoken to a staff representative from the Ombudsman's Office to understand which specific provision of NRS or NAC 116 may have been violated.

Yes ☐ No ☒ If yes, name: _____

STATE OF NEVADA
COUNTY OF: LYON DATE: July 15, 2021

I, _____, (Complainant), after being first duly sworn, state under penalty of perjury and based upon personal knowledge have been aggrieved by an alleged violation of Chapter 116 of the Nevada Revised Statutes, Nevada Administrative Code or the governing documents of the association.

1. The person or entity who committed the alleged violation and who was sent the required certified letter is (if multiple, list each Respondent):

   _____

2. The Respondent or respondents role in the community:

   _____

3. The Homeowners Association involved in this Intervention Affidavit is:

   _____

4. List the Association's Secretary of State (SOS) Business ID Number _____

   To locate SOS ID Number go to the Secretary of State website.

CICC0090

STATE OF NEVADA
DEPARTMENT OF BUSINESS AND INDUSTRY
REAL ESTATE DIVISION
3300 West Sahara Avenue, Suite 325, Las Vegas, NV 89102
(702) 486-4480 * Toll free: (877) 829-9907 * Fax: (702) 486-4520
E-mail: CICOmbudsman@red.nv.gov http://www.red.nv.gov

RECEIVED
JUL 20 2021
Dept of Business & Industry
NV Real Estate Division - LV MAIL

You are required to state one alleged violation, with a brief description, per page (reprint this page for each separate alleged violation). Each allegation must have its own supporting documentation (Exhibit #1 for allegation #1, and so on), which must be placed directly behind the allegation when submitting this package. *Do not write "See Attached."* If *"See Attached"* is written in the sections below your complaint will not be processed.

ALLEGED VIOLATION: (To the point, state the alleged violation.)

ALLEGED VIOLATION NUMBER: 3

NRS 116.31034 (10) (a), 2 10. Except as otherwise provided in subsections 11 and 12, unless a person is appointed by the declarant:
(a) A person may not be a candidate for or member of the executive board or an officer of the association if:
(2) The person stands to gain any personal profit or compensation of any kind from a matter before the executive board of the association;

RECOMMENDED CORRECTIVE ACTION:

REMOVE OR NULLIFY VOTES FOR CANDIDATES WITH IMPROPERLY COMPLETED AND REVIEWED DISCLOSURE DOCUMENTS. OWNING ANY PART OF THE GOLF COURSE PROVIDES PERSONAL GAIN OR PROFIT TO ANY EQUITY HOLDER IN THE GOLF COURSE WHO IS ALSO A HOMEOWNER.

SUPPORTING LAW AND/OR GOVERNING DOCUMENTS: (List the applicable laws and/or sections of governing documents.)

NRS 11634 (10) (a) 2

ATTACHMENTS: (List the types of documents included, i.e., budget, notices of violation, governing document provisions, etc. specific to the alleged violation cited above):

BALLOT (COPY)
AUDIO FILE OF 8/9/2021 BOARD MEETING (THUMB DRIVE)
Case # 2019-89 Sharath Chandra Admin. vs Vistana Condominium Association (Thumb Drive)
ALL PREVIOUS AND REDUNDANT EXHIBITS

I have read the foregoing Affidavit consisting of 1 pages (including all additional attached pages), and it is true and correct to the best of my knowledge andbelief.

Signature of Complainant _____
Name JOSEPH F. HUGHES
Street Address 905 LAKEVIEW DR
City, State, Zip DAYTON, NV 89403
Phone (775) 230-6728

State of NV - County of Lyon

Subscribed and sworn to before me
This 15th day of July, 20 21.

_____ NOTARY PUBLIC

ASHLEY COLE
NOTARY PUBLIC
STATE OF NEVADA
No. 17-4156-12 My Appt. Exp. Sept. 28, 2021

You can mail or hand-deliver the completed affidavit package to:
NEVADA REAL ESTATE DIVISION
OFFICE OF THE OMBUDSMAN
COMMON-INTEREST COMMUNITIES AND
CONDOMINIUM HOTELS PROGRAM
3300 W. SAHARA AVE., SUITE 325, LAS VEGAS, NEVADA 89102
Email and fax submissions will not be accepted
It is advised that you retain a copy of this packet for yourself prior to submission.

USPS TRACKING #

9590 9402 4256 8121 5085 69

First-Class Mail
Postage & Fees Paid
USPS
Permit No. G-10

RECEIVED
JUL 20 2021
Dept of Business & Industry
NV Real Estate Division - LV MAIL

United States
Postal Service

• Sender: Please print your name, address, and ZIP+4® in this box •

JOE HUGHES
905 LAKEVIEW DR
DAYTON, NV 89403

SENDER: COMPLETE THIS SECTION

- Complete items 1, 2, and 3.
- Print your name and address on the reverse so that we can return the card to you.
- Attach this card to the back of the mailpiece, or on the front if space permits.

1. Article Addressed to:

DAYTON VALLEY COMMUNITY ASSOC.
ATTN: BOARD OF DIRECTORS
C/O CAMCO
704 WEST NYE LANE #101
CARSON CITY, NV 89703

9590 9402 4256 8121 5085 69

2. Article Number *(Transfer from service label)*

7019 1120 0001 7374 9239

COMPLETE THIS SECTION ON DELIVERY

A. Signature

X J Thompson ☐ Agent ☐ Addressee

B. Received by *(Printed Name)* C. Date of Delivery

D. Is delivery address different from item 1? ☐ Yes
If YES, enter delivery address below: ☐ No

3. Service Type

- ☐ Adult Signature
- ☐ Adult Signature Restricted Delivery
- ☐ Certified Mail®
- ☐ Certified Mail Restricted Delivery
- ☐ Collect on Delivery
- ☐ Collect on Delivery Restricted Delivery
- ☐ Priority Mail Express®
- ☐ Registered Mail™
- ☐ Registered Mail Restricted Delivery
- ☐ Return Receipt for Merchandise
- ☐ Signature Confirmation™
- ☐ Signature Confirmation Restricted Delivery

PS Form 3811, July 2015 PSN 7530-02-000-9053 Domestic Return Receipt

EXHIBIT #1
VIOLATIONS #1, #2, #3

June 25, 2021

EXHIBIT #2
Violation 1, 2, 3

Dayton Valley Community Association
Attn: Board of Directors
c/o CAMCO
704 West Nye Lane Ste #101
Carson City, NV 89703

RECEIVED
JUL 20 2021
Dept of Business & Industry
NV Real Estate Division - LV MAIL

Joseph F. Hughes
Director DVCA
905 Lakeview Dr
Dayton, NV 89403

Dear, Mr. Drury, Ms Mass, Mr. Kreie, Mrs. Darragh,

This communication is to notify the aforementioned Directors of the intention to file Form 530 Intervention Affidavit on behalf of the members of the Dayton Valley Community Association for violations of the following NRS 116 statutes:

NRS 116.3103

1.) Failure to exercise Fiduciary Responsibility and act in the best interest of the membership. On June 9, 2021 at the Board Meeting the Board was charged to review an Election Package for a delayed Annual Meeting scheduled for July 22, 20221 to be monitored by The Ballot Box. Included in the "Election Package" were "Candidate Disclosure Statements". During review of the Candidates Disclosure Statements, Director Kreie, one of the candidates whose statements was be called into question for review, interupted the review proceedings and made a motion to call for a vote of the Board to accept the Election Package in it's entirety. The motion was seconded and voted upon by Board Members Drury, Mass, Darragh and Kreie assenting and Board Members Puzzo and Hughes dissenting. The motion subsequently carried 4 to 2. Director Kreie wrongfully interupted a Board discussion upon which he was to be a subject of and called for a vote on matters that were being discussed before completion in front of the membership. The Board by not allowing the issues surrounding the "Candidate Disclosure Statements" to be discussed to completion failed to uphold their Fiduciary Responsibility to the Association.

NRS 116.31034 (9) (a), (b.)

Failing to thoroughly review the Candidates Disclosure Documents in the election package by not reviewing the documents for potential conflicts of interest and for insufficiently completed by the candidates as required by State of Nevada Real Estate Divisions Ombudsman's Office.

NRS 116.31034 (10) (a) (2)

Director Kreie is a proclaimed investor in Tour Spec's.

Director Kreie was an investor in Tour Spec's in January 27, 2021 when a motion was brought by Treasurer Joseph Hughes to discontinue using membership funds to pay for golf course landscaping. The motion carried 4 to 2, with Directors Hughes, Puzzo, Mass and Darragh voting affirmative and Directiors Drury and Kreie in the negataive. Director Kreie wrongfully failed to disclose he was an owner of Tour Spec's, the company that had just completed purchase of the Dayton Valley Golf Course. Director Kreie wrongfully acted against his fiduciary responsibilities and conflict of interest responsibilities to the Association.

Candidate Kepler initially fails to disclose he is the owner of Tour Spec's the main entity owning and managing the golf course.

The corrective actions being sought is removal of Director/Candidate Kreie and Candidate Kepler from the July 22, 2021 Annual Meeting ballot, or subsequently, nullification of votes for either candidate.

Respectfully,

Joseph F. Hughes
Director
Dayton Valley Community Association

Kreie since 1/27/21 investor in Tour Specs (connected to the golf course) when did he disclose he was an owner? potential conflict ??

This section look like there may be something

EXHIBIT #3
VIOLATIONS
1, 2, 3

Dayton Valley Community Association
Annual Meeting 7/22/21
Secret Ballot

RECEIVED
JUL 20 2021
Dept of Business & Industry
NV Real Estate Division - LV MAIL

You have 7 total votes. You may cast 1 vote each for as many as 7 different candidates. Ballots with more than 7 total votes cast will be void. Less than 7 votes is permitted. Mark as many as 7 votes with an 'X' or '√'

- ☐ Leandra Carr
- ☐ Carla Cole – OUT
- ☐ Paula Darragh
- ☐ Dennis Drury
- ☐ Mary W. Farias
- ☐ Steven Gallisdorfer
- ☐ Joseph Hughes
- ☐ Jim Kepler – OUT
- ☐ Doug Kreie – OUT
- ☐ Joan Latimer
- ☐ Sandra (Sandy) Mass
- ☐ Lisa Miller-Hobbs
- ☐ Amy Puzzo
- ☐ Roger Rocha – OUT
- ☐ Steve Simoni – ?
- ☐ Rich Wilde – OUT

VOTING INSTRUCTIONS ON REVERSE

EXHIBIT #4A
VIOLATIONS #1, #2, #3

9874888-14-3-4

DAYTON VALLEY COMMNITY ASSOCIATION

RECEIVED
JUL 20 2021

Candidacy Disclosure Statement

s form is provided for Homeowners who wish to run for the Board of Directors (you may nominate yourself). You must return this form to us no later than March 24, 2021 by 5:00 PM. The official meeting notice advising the exact date, time and location of the Election meeting will be mailed to all homeowners eligible to vote at a later date. There are seven (7) seats on the Board to fill.

NAME OF NOMINEE: DOUG KREIE

ARE YOU A HOMEOWNER IN THE ASSOCIATION STATED ABOVE? _____ _____

(YES) NO

Per NRS 116.31034 (5) (a) and (b), please complete the following information regarding your candidacy. Please print your responses

1.) Each person whose name is placed on the ballot as a candidate for a member of the executive Board must:

(a) Make a good faith effort to disclose any financial, business, professional or personal relationship or interest that would result or would appear to a reasonable person to result in a potential conflict of interest for the candidate if the candidate were to be elected to serve as a member of the executive board; and (Please respond to the statutory requirements cited above).

116.3034 (5) (a)

conflict

(b) disclose whether or not the candidate is a member in good standing for the purpose of this paragraph, a candidate shall not be deemed to be in "good standing" if the candidate has any unpaid or past due assessments or construction penalties that are required to be paid to the association. Please answer the question below by placing an X in the correct answer.

I am a member in "Good Standing" with the Association: Yes X **No** ___

2.) Experience: What skills do you feel you have that will contribute to the Board and Association? (Optional):

Self EMPLOYED FOR 30 YEARS DEALING IN ALL ASPECTS OF BUSINESS

3.) Why do you want to serve on the Board? (Optional):

I HAVE BEEN ON THE BOARD FOR 2 YEARS AS ARCHITECURAL COMMITTE CHAIRMAN & WOULD LIKE TO CONTINUE.

I reside in a unit with, am married to, domestic partners with, or am related by blood, adoption or marriage within the third degree of consanguinity or affinity to another person who is also a member of the executive board or is an officer of the association. ____ yes ____ no If yes, please explain on a separate sheet of paper).

Note: Nothing cited in this disclosure is intended to prevent a potential candidate from running for the board of directors. Further, the Board will not prohibit a candidate from appearing on the ballot for failure to provide a disclosure statement, or for providing an inaccurate one or one with content that is defamatory, libelous or profane. Should a candidate not complete a disclosure statement, or should it contain content believed to be defamatory, libelous or profane, the board will note the fact in a statement to be included with election-related mailings. Further, a complaint may be filed with the Real Estate Division against the candidate who does not comply with the disclosure requirement.

Nominee Signature (Required): D. Kreie

By signing this form I acknowledge that NRS 116.31034 requires a candidate to make all disclosures required by NRS 116.31034 in writing to the Association with his/her candidacy information, and that the disclosures must be distributed by the Association to each Member of the Association, with the ballot, in the manner established in the Bylaws of the Association, for that candidate to be eligible for office. By signing this form I agree to allow the Association to release any of the information I have supplied on this form.

9874888 6759FCMP-2

EXHIBIT #4B
VIOLATIONS 1, 2, 3 #4, #4

CANDIDACY DISCLOSURE STATEMENT

(Please Print or Type)

RECEIVED
JUL 20 2021
Dept of Business & Industry
NV Real Estate Division
VIA E-MAIL

Name DOUG KREIS

Address 144 SAWGRASS LN (Street) DAYTON (City) NV. (State) 89403 (Zip)

Are you a unit owner? ..... ☒ Yes ☐ No

(NOTE: NRS 116.31034(1) states: Except as otherwise provided in subsection 5 of NRS 116.212, not later than the termination of any period of declarant's control, the units' owners shall elect an executive board of at least three members, all of whom must be units' owners.)

NRS 116.31034 (9) (a) & (b) and NRS 116.31034 (10) (a) & (b) states the following:

9. Each person who is nominated as a candidate for membership on the executive board pursuant to subsection 4 must:
   (a) Make a good faith effort to disclose any financial, business, professional or personal relationship or interest that would result or would appear to a reasonable person to result in a potential conflict of interest for the candidate if the candidate were to be elected to serve as a member of the executive board; and
   (b) Disclose whether the candidate is a member in good standing. For the purposes of this paragraph, a candidate shall not be deemed to be in "good standing" if the candidate has any unpaid and past due assessments or construction penalties that are required to be paid to the association.
10. Except as otherwise provided in subsections 11 and 12, unless a person is appointed by the declarant:
   (a) A person may not be a candidate for or member of the executive board or an officer of the association if:
      (1) The person resides in a unit with, is married to, is domestic partners with, or is related by blood, adoption or marriage within the third degree of consanguinity or affinity to another person who is also a member of the executive board or is an officer of the association;
      (2) The person stands to gain any personal profit or compensation of any kind from a matter before the executive board of the association; or
      (3) The person, the person's spouse or the person's parent or child, by blood, marriage or adoption, performs the duties of a community manager for that association.

   (b) A person may not be a candidate for or member of the executive board of a master association or an officer of that master association if the person, the person's spouse or the person's parent or child, by blood, marriage or adoption, performs the duties of a community manager for:
      (1) That master association; or
      (2) Any association that is subject to the governing documents of that master association.

Please use the following lines to respond to the statutory requirements pursuant to NRS 116.31034 (9) (a)

Attach additional sheets, if necessary: I AM A MINORITY STOCKHOLDER IN TOUR SPECS Conflict

I am a candidate in good standing pursuant to NRS 116.31034(9) (b): ..... ☒ Yes ☐ No

If no, please explain: _____

Please indicate all that apply to your relation to any board members, officer(s) of the association or community managers:

I am:

- ☐ Residing within the same unit as a board member or officer.
- ☐ Married to a board member or officer.
- ☐ Domestic partners with a board member or officer.
- ☒ **None of the above**

Related to a board member by:

- ☐ Blood
- ☐ Adoption
- ☐ Marriage within the third degree of consanguinity
- ☐ Affinity to another person
- ☒ **None of the above**

The candidate must make all disclosures required pursuant to this subsection in writing to the association with his or her candidacy information. Except as otherwise provided in this subsection, the association shall distribute the disclosures, on behalf of the candidate, to each member of the association with the ballot or, in the event ballots are not prepared and mailed pursuant to subsection 5, in the next regular mailing of the association. The association is not obligated to distribute any disclosure pursuant to this subsection if the disclosure contains information that is believed to be defamatory, libelous or profane.

Any additional information provided by the candidate for the executive board is voluntary and is not a requirement under NRS 116.31034.

Signature of candidate _____ *Date* 6-2-2021

Revised 7/18/19

EXHIBIT #4C
VIOLATION #1, #2, #3

RECEIVED
JUL 20 2021
Dept of Business & Industry
NV Real Estate Division - LV MAIL

My name is Doug Kreie and I am running for reelection to the Board of Directors of the Dayton Valley Home Owners Association

I have 30 years' experience as a business owner. I have worked with financials and expense reports as well as profit and loss, cash flow analysis long term views and forward thinking. If this is the type of person you want on the board I would like your vote. I have served as your architectural committee chairman for the last two and a half years. If you have been happy with the way your applications have been handled I would appreciate your vote.

Also I would like to endorse Dennis Drury, Sandy Mass, and Paula Darragh for reelection.

EXHIBIT #5A
VIOLATIONS #1, #2, #3

Candidacy Disclosure Statement

RECEIVED
JUL 20 2021
Dept of Business & Industry
NV Real Estate Division - LV MAIL

This form is provided for Homeowners who wish to run for the Board of Directors (you may nominate yourself). You must return this form to us no later than March 24, 2021 by 5:00 PM. The official meeting notice advising the exact date, time and location of the Election meeting will be mailed to all homeowners eligible to vote at a later date. There are seven (7) seats on the Board to fill.

NAME OF NOMINEE: ___Jin Kepler_____

ARE YOU A HOMEOWNER IN THE ASSOCIATION STATED ABOVE? ____Yes_____ _____ **YES NO**

Per NRS 116.31034 (5) (a) and (b), please complete the following information regarding your candidacy. Please print your responses.

1.) Each person whose name is placed on the ballot as a candidate for a member of the executive Board must:

(a) Make a good faith effort to disclose any financial, business, professional or personal relationship or interest that would result or would appear to a reasonable person to result in a potential conflict of interest for the candidate if the candidate were to be elected to serve as a member of the executive board; and (Please respond to the statutory requirements cited above).

N/A None 116.31034.(5)(a)

(b) disclose whether or not the candidate is a member in good standing for the purpose of this paragraph, a candidate shall not be deemed to be in "good standing" if the candidate has any unpaid or past due assessments or construction penalties that are required to be paid to the association. Please answer the question below by placing an X in the correct answer.

I am a member in "Good Standing" with the Association: Yes x___ No ___

2.) Experience: What skills do you feel you have that will contribute to the Board and Association? (Optional):

I have personally been a homeowner in Dayton Nv for over 30 Years and have lived at the golf course since 2005. Where I was the head Pro to the golf course from 1991-1998. Then I was the General Manager from 1998-2006. I helped with the homeowners before the HOA was established.

3.) Why do you want to serve on the Board? (Optional):

I want to help with the growth in our community. I enjoy the people and feel now is the time for us to make positive changes going forward. As the new owner to the golf course, I feel that a good relationship between the owners, community and golf course is a positive way to move forward.

I reside in a unit with, am married to, domestic partners with, or am related by blood, adoption or marriage within the third degree of consanguinity or affinity to another person who is also a member of the executive board or is an officer of the association. ____yes _x___ no If yes, please explain on a separate sheet of paper).

Note: Nothing cited in this disclosure is intended to prevent a potential candidate from running for the board of directors. Further, the Board will not prohibit a candidate from appearing on the ballot for failure to provide a disclosure statement, or for providing an inaccurate one or one with content that is defamatory, libelous or profane. Should a candidate not complete a disclosure statement, or should it contain content believed to be defamatory, libelous or profane, the board will note the fact in a statement to be included with election-related mailings. Further, a complaint may be filed with the Real Estate Division against the candidate who does not comply with the disclosure requirement.

Nominee Signature (Required): Jin Kepler

By signing this form I acknowledge that NRS 116.31034 requires a candidate to make all disclosures required by NRS 116.31034 in writing to the Association with his/her candidacy information, and that the disclosures must be distributed by the Association to each Member of the Association, with the ballot, in the manner established in the Bylaws of the Association, for that candidate to be eligible for office. By signing this form I agree to allow the Association to release any of the information I have supplied on this form.

EXHIBIT #5B
VIOLATIONS #1, #2, #3

CANDIDACY DISCLOSURE STATEMENT

(Please Print or Type)

RECEIVED
JUL 20 2021
Dept of Business & Industry
Real Estate Division

Name James H. Kepler

Address 681 St. Andrews (Street) Dayton (City) Nv (State) 89403 (Zip)

Are you a unit owner? ..... ☒ Yes ☐ No

(NOTE: NRS 116.31034(1) states: Except as otherwise provided in subsection 5 of NRS 116.212, not later than the termination of any period of declarant's control, the units' owners shall elect an executive board of at least three members, all of whom must be units' owners.)

NRS 116.31034 (9) (a) & (b) and NRS 116.31034 (10) (a) & (b) states the following:

9. Each person who is nominated as a candidate for membership on the executive board pursuant to subsection 4 must:
   (a) Make a good faith effort to disclose any financial, business, professional or personal relationship or interest that would result or would appear to a reasonable person to result in a potential conflict of interest for the candidate if the candidate were to be elected to serve as a member of the executive board; and
   (b) Disclose whether the candidate is a member in good standing. For the purposes of this paragraph, a candidate shall not be deemed to be in "good standing" if the candidate has any unpaid and past due assessments or construction penalties that are required to be paid to the association.
10. Except as otherwise provided in subsections 11 and 12, unless a person is appointed by the declarant:
   (a) A person may not be a candidate for or member of the executive board or an officer of the association if:
      (1) The person resides in a unit with, is married to, is domestic partners with, or is related by blood, adoption or marriage within the third degree of consanguinity or affinity to another person who is also a member of the executive board or is an officer of the association;
      (2) The person stands to gain any personal profit or compensation of any kind from a matter before the executive board of the association; or
      (3) The person, the person's spouse or the person's parent or child, by blood, marriage or adoption, performs the duties of a community manager for that association.

   (b) A person may not be a candidate for or member of the executive board of a master association or an officer of that master association if the person, the person's spouse or the person's parent or child, by blood, marriage or adoption, performs the duties of a community manager for:
      (1) That master association; or
      (2) Any association that is subject to the governing documents of that master association.

Please use the following lines to respond to the statutory requirements pursuant to NRS 116.31034 (9) (a)

Attach additional sheets, if necessary: See Attached Statement

I am a candidate in good standing pursuant to NRS 116.31034(9) (b): ..... ☒ Yes ☐ No

If no, please explain: _____

Please indicate all that apply to your relation to any board members, officer(s) of the association or community managers:

I am:

- ☐ Residing within the same unit as a board member or officer.
- ☐ Married to a board member or officer.
- ☐ Domestic partners with a board member or officer.
- ☒ **None of the above**

Related to a board member by:

- ☐ Blood
- ☐ Adoption
- ☐ Marriage within the third degree of consanguinity
- ☐ Affinity to another person
- ☒ **None of the above**

The candidate must make all disclosures required pursuant to this subsection in writing to the association with his or her candidacy information. Except as otherwise provided in this subsection, the association shall distribute the disclosures, on behalf of the candidate, to each member of the association with the ballot or, in the event ballots are not prepared and mailed pursuant to subsection 5, in the next regular mailing of the association. The association is not obligated to distribute any disclosure pursuant to this subsection if the disclosure contains information that is believed to be defamatory, libelous or profane.

Any additional information provided by the candidate for the executive board is voluntary and is not a requirement under NRS 116.31034.

James H. Kepler
Signature of candidate

5/26/2021
Date

Revised 7/10/19

EXHIBIT 45 C
VIOLATIONS #1, #2, #3

RECEIVED
JUL 20 2021
Dept of Business & Industry
NV Real Estate Division - LV MAIL

March 23, 2021

To Whom it May Concern:

My name is Jim Kepler, Sr. I have been a resident of Dayton Valley since 1991. As a Class A PGA Golf Professional for 36 years and present during the inception of Dayton Valley Golf Course I feel I have the dedication necessary to be an effective and knowledgeable asset to the Homeowner's Association Board.

I personally purchased a home on the golf course in 2005 and have watched the Dayton Valley Gated Community grow from 6 homes to over 800 homes. Previously as the General Manager from 1998-2006 and then being rehired in 2018 to manage again, I have worked extensively with the Developers, the HOA and County Officials to make DV a great community to live.

My wife and I have raised six children here and we are committed to the Dayton community. I have established not only business relationships but community relationships with the education system, youth sports, Veterans, Water, Sewer, County Fire Department, Lyon County Public Works, Chamber of Commerce and Community Roots.

I have formed lasting relationships with the Homeowner's on the golf course and in the surrounding community. In December 2020, with the support of Dayton Valley homeowners and outside investors, we completed the purchase of Dayton Valley Golf Course. As such, I have a vested interest in seeing the community continue to flourish.

I also want to assure the board that if there are potential conflicts of interest, I will always recuse myself.

I would appreciate your support for a position on the board.

Sincerely, Jim Kepler, Sr.

July 15, 2021

RECEIVED
JUL 20 2021
Dept of Business & Industry
NV Real Estate Division - LV MAIL

Nevada Real Estate Division
Office of the Ombudsman
Common-Interest Communities and
Condominium Hotels Program
3300 W. Sahara Ave Suite 325
Las Vegas, NV 89102

Joseph Hughes
905 Lakeview Dr
Dayton, NV 89403

Dear Investigator,

Just a brief explanation of what is included in this complaint against four members of the Dayton Valley Community Association and the supporting documents as to avoid redundancy and seeing that certain documents are originals and can be utilized as exhibits for the 3 violations.

Brief summary of supporting evidence and explanation.

To move the election forward there was a ballot package presented to the Board that was to be reviewed. The package had envelopes, ballot (copy included) and candidate disclosure documents, (original included as exhibit). Also supporting is an audio of the meeting on a thumb drive along with a referenced similar type of case Sharath Chandra vs Vistana Condominium Association Case #2019-89.

Also included is an audio recording and the meeting minutes of the January 27, 2021 Board Meeting that will show Director Kreie failing to recuse himself and procede to vote on a matter before the Board to spend membership monies on an investment he holds, (Golf Course via Tour Spec's Management).

It is highly suggested listening to the entire audio of the meeting so one can begin to understand the depth of the problems within the Board of the Community.

This complaint seeks in no way to delay this overdue election of the board of directors any further, but merely to seek relief from a board that has constantly and consistently shown no regard for the basic tenets of NRS 116. We seek for the Ombudsman to uphold the rule of law and restore this community's faith in the protections the statutes are supposed to provide.

Unfortunately this matter requires expidited review as the Annual Meeting and Election Date is 7/22/2021.

Respectfully submitted,

Joseph P. Hughes
Director
Dayton Valley Community Association

This case will close as a duplicate to 2021-696
opened 7/21/21
~~Do resolution~~
~~report~~

Lyon County

Parcel 029-122-10

Owners

HUGHES, JOSEPH F
1620 YORK ST
SAN FRANCISCO, CA 94110-0000

Parcel Summary

905 LAKEVIEW DR
DAYTON VALLEY, NV
200 Single Family Residence
8.8 Central Lyon Fire District
30
DAYTON VALLEY C C UNIT 8A
029-12.pdf (228kb)
SUB318690



Property Boundaries

Value History

$167,755	$168,483	$162,311	$158,423	$158,351	$162,094	$145,394
$7,274	$0	$0	$0	$0	$0	$0
$135,000	$90,000	$72,000	$44,000	$26,000	$10,429	$10,429
$310,029	$258,483	$234,311	$202,423	$184,351	$172,523	$155,823
$0	$0	$0	$0	$0	$0	$0
$108,510	$90,469	$82,009	$70,848	$64,523	$60,383	$54,538
$0	$0	$0	$0	$0	$0	$0
$0	$0	$0	$0	$0	$0	$0

Document/Transfer/Sales History

Official Record	Date	Type	Vacant/Improved	Deed Value	
474356	2011-02-28	GRANT BARGAIN SALE DEED	Improved	$135,000	Grantor: BANK OF NEW YORK MELLON TR Grantee: HUGHES, JOSEPH F
470509	2011-01-10	TRUSTEES DEED	Improved	$133,200	Grantor: TRAN, THANH THI Grantee: BANK OF NEW YORK MELLON TR
346988	2005-03-15	GRANT BARGAIN SALE DEED	Improved	$270,972	Grantor: LAKEMONT DAYTON HOMES III LLC Grantee: TRAN, THANH THI
320735	2004-05-14	GRANT BARGAIN SALE DEED	Vacant	$0	Grantee: LAKEMONT DAYTON HOMES III LLC
318690	2004-04-20	SUBDIVISION MAP	Vacant	$0	Grantee: DAYTON VALLEY C C UNIT 8A
279806	2002-07-18	SUBDIVISION MAP	Vacant	$0	Grantee: DAYTON VALLEY COUNTRY CLUB 5B
259889	2001-04-19	SUBDIVISION MAP	Vacant	$0	Grantee: DAYTON VALLEY INVESTORS LLC
246341	2000-04-04	GRANT BARGAIN SALE DEED	Vacant	$0	Grantee: DAYTON VALLEY INVESTORS LLC
244533	2000-02-15	GRANT BARGAIN SALE DEED	Vacant	$1,984,050	Grantee: DAYTON VALLEY INVESTORS ET AL
236174	1999-07-08	GRANT BARGAIN SALE DEED	Vacant	$2,000,000	Grantor: COMLAW NO 445 Grantee: DAYTON VALLEY INVESTORS, LLC
232542	1999-04-19	PARCEL MAP	Vacant	$0	Grantee: COMLAW NO 445 LIMITED
217292	1998-04-09	GRANT BARGAIN SALE DEED	Vacant	$0	Grantee: COMLAW NO 445 LIMITED
182901	1995-06-07	PARCEL MAP	Vacant	$0	Grantee: JOHN LAWRENCE (NEVADA) INC
139969	1991-03-05	EASEMENT/RIGHT-OF-WAY DEED	Vacant	$0	Grantee: JOHN LAWRENCE (NEVADA) INC

108203	1990-12-10	RELEASE DEFERRED TAX LIEN	Vacant	$0	LAWRENCE (NEVADA) INC
124613	1989-05-24	BOUNDARY ADJUSTMENT MAP	Vacant	$0	
111626	1987-11-17	GREEN BELT APPROVED	Vacant	$0	
105478	1987-02-13	GRANT BARGAIN SALE DEED	Vacant	$0	
102038	1986-09-12	PARCEL MAP	Vacant	$0	
92698	1985-05-15	GREEN BELT APPROVED	Vacant	$0	
90464	1984-12-31	GRANT BARGAIN SALE DEED	Vacant	$0	
90460	1984-12-31	GRANT BARGAIN SALE DEED	Vacant	$0	
90459	1984-12-31	EXECUTORS/ADMINISTRATORS DEED	Vacant	$0	
90279	1984-12-17	ESTATE/DECREE OF DISTRIBUTION	Vacant	$0	

Buildings

Building # 1, Section # 1, RESIDENCE, Single Family Residence

RES	01	1591	$225,175	2004	2004	0.00%	25.50%	74.50%	$167,755

Structural Elements

ROOF	ROOF	0209	Concrete Tile
EW	EXT WALL	0109	Frame, Stucco
HEAT	HEAT	0351	Warmed & Cooled Air
0502	Automatic Appliance Allowance	1.00	
0601	Plumbing Fixtures -#	10.00	
0602	Plumbing Fixtures Rough-ins -#	1.00	
SBFL	SubFloor (RES)	0622	Raised Subfloor (%)
0402	Automatic Floor Cover Allowance	1.00	
0701	Attached Garage	410.00	
0904	Slab Porch with Roof (SF)	48.00	
BED	Bedrooms	3.00	
BTHF	Bath-Full	2.00	

Subareas

GLA	1,591	100%	1,591

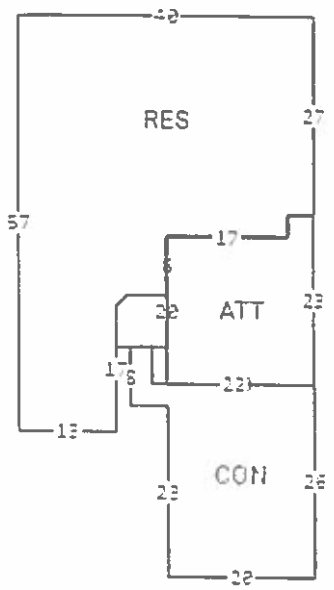

Extra Features

CONCLF	CONCRETE "LOW-FAIR" 420SF 1/19	1.00	$2,213	2004	$2,213	75%	$1,649
FNC LF	FENCE "LOW-FAIR" 200' 1/19	1.00	$5,647	2004	$5,647	75%	$4,207
SPR LF	SPRINKLERS "LOW-FAIR" 1800SF 1/19	1.00	$1,904	2004	$1,904	75%	$1,418

*RCNLD: Replacement Cost New, Less Depreciation

Personal Property

None

Land Lines

Home	Accessibility	©2020 GSA, Government Software Assurance Corp					
200	Single Family Residence	NR1	1.00	SF	0.14	1.00	$135,000

Disclaimer

All parcel data on this page is for use by the Lyon County Property Appraiser for assessment purposes only. The summary data on this page may not be a complete representation of the parcel or of the improvements thereon. Building information,

including unit counts and number of [redacted]tted units, should be verified with the app[redacted]iate building and planning agencies. Zoning information should b[redacted]rified with the appropriate planning agen[redacted] l parcels are reappraised each year. This is a true and accurate copy of the records of the Lyon County Assessor's Office as of June 29, 2021.

Gayle A. Kern, Esq. Reply to: Reno

August 20, 2021

Via email to csmstaffen@red.nv.gov and first class mail

Christy Staffen
State of Nevada Department of Business and Industry
Real Estate Division
Office of the Ombudsman
3300 West Sahara Avenue, Suite 325
Las Vegas, Nevada 89102

Re: *Dayton Valley Community Association*
File Number 2021-761

Dear Ms. Staffen:

As you know, this law firm represents Dayton Valley Community Association ("Association") and has been retained by the Board of Directors ("Board") to respond to your letter of August 9, 2021 to the Board President, Dennis Drury, regarding Case No. 2021-761 with the Nevada Real Estate Division ("Division"). Although I was not aware of a third complaint being filed, my previous comprehensive response regarding Case No. 2021-696 is nearly identical to this claim and is enclosed for your review. In addition, I reference the letter to you regarding Case No. 2021-696 as well. I have not provided the documents again as I understand they are in the Division's files. If you need me to send them again, please do not hesitate to contact me.

However, in the interest of expediting the closure of this matter, I repeat the Division's allegations in the August 9, 2021 letter and respond below. In addition, we are confused as to why the matter did not conclude after the correspondence with Ms. Michael. If you could explain why the Division is continuing the investigation, we would appreciate it. These investigations are very expensive and time-consuming for an Association and when there is no evidence to support the allegations by the owners, it would seem appropriate the Division would take no further action. If after review of the July 27, 2021 letter, there had been any concerns, we most certainly would like to address such concerns. However, as the allegations do not add any concerns, we are unsure if there is additional information you require.

Allegations and Response:

1. It is alleged that you "NRS 116.3103 Failure to exercise fiduciary responsibility and act in the best interest of the membership by not properly reviewing candidate disclosure statements. Allowing Board member to motion for vote on matter that board member was

directly the subject matter of review of their own omissions." It is alleged that your actions are a violation of NRS 116.3103 AND NRS 116.31034(9)(a) and (10).

2. It is alleged that you "NRS 116.31034(9)(a)(9) each person who is nominated as a candidate for membership on the executive board pursuant to subsection 4 must: (a) Make a good faith effort to disclose any financial, buisness, professional or personal relationship or interest that would result or would appear to a reasonable person to result in a potential conflict of interest that would result or would appear to a reasonable person to result in a potential conflict of interest for the candidate if the candidate were to be elected to serve as a member of the executive board." It is alleged that your actions are a violation of NRS 116.31034(9)(a).

3. It is alleged that you "NRS 116.31034(10)(a)(2)(10) Except as otherwise provided in Subsections 11 and 12, unless a person is appointed by the declarant (a) A person may not be a candidate for or member of the executive board or an officer of the association if: 2) The person stands to gain any personal profit or compensation of any kind from a matter before the executive board of the association." It is alleged that your actions are a violation of NRS 116.31034(10)(a)(2).

The alleged violations are of NRS 116.3103 and NRS 116.31034(9)(a) and (10). Also referenced are NRS 116.31034(9)(a)(9) and NRS 116.31034(10)(a)(2)(10), which do not exist. With respect to the existing provision, they are set forth below:

> **NRS 116.3103 Power of executive board to act on behalf of association; members and officers are fiduciaries; duty of care; application of business-judgment rule and conflict of interest rules; limitations on power.**
>
> 1. Except as otherwise provided in the declaration, the bylaws, this section or other provisions of this chapter, the executive board acts on behalf of the association. In the performance of their duties, the officers and members of the executive board are fiduciaries and shall act on an informed basis, in good faith and in the honest belief that their actions are in the best interest of the association. Officers and members of the executive board:
>
> (a) Are required to exercise the ordinary and reasonable care of officers and directors of a nonprofit corporation, subject to the business-judgment rule; and
>
> (b) Are subject to conflict of interest rules governing the officers and directors of a nonprofit corporation organized under the law of this State.
>
> 2. The executive board may not act to:
>
> (a) Amend the declaration.
>
> (b) Terminate the common-interest community.

(c) Elect members of the executive board, but notwithstanding any provision of the governing documents to the contrary, the executive board may fill vacancies in its membership for the unexpired portion of any term or until the next regularly scheduled election of executive board members, whichever is earlier. Any executive board member elected to a previously vacant position which was temporarily filled by board appointment may only be elected to fulfill the remainder of the unexpired portion of the term.

(d) Determine the qualifications, powers, duties or terms of office of members of the executive board.

3. The executive board shall adopt budgets as provided in NRS 116.31151.

NRS 116.31034 Election of members of executive board and officers of association; term of office of member of executive board; staggered terms; eligibility to be candidate for or member of executive board or officer of association; required disclosures; procedure for conducting elections; certification by member of executive board of understanding of governing documents and provisions of chapter.

. . .

9. Each person who is nominated as a candidate for membership on the executive board pursuant to subsection 4 must:

(a) Make a good faith effort to disclose any financial, business, professional or personal relationship or interest that would result or would appear to a reasonable person to result in a potential conflict of interest for the candidate if the candidate were to be elected to serve as a member of the executive board; and

. . .

10. Except as otherwise provided in subsections 11 and 12, unless a person is appointed by the declarant:

(a) A person may not be a candidate for or member of the executive board or an officer of the association if:

(1) The person resides in a unit with, is married to, is domestic partners with, or is related by blood, adoption or marriage within the third degree of consanguinity or affinity to another person who is also a member of the executive board or is an officer of the association;

(2) The person stands to gain any personal profit or compensation of any kind from a matter before the executive board of the association; or

(3) The person, the person's spouse or the person's parent or child, by blood, marriage or adoption, performs the duties of a community manager for that association.

> (b) A person may not be a candidate for or member of the executive board of a master association or an officer of that master association if the person, the person's spouse or the person's parent or child, by blood, marriage or adoption, performs the duties of a community manager for:
>
> (1) That master association; or
>
> (2) Any association that is subject to the governing documents of that master association.

Although not identified in the allegations above, the original communication from Mr. Hughes attacked Carla Cole, James Kepler, and Doug Kreie would stand to gain personal profit or compensation if they were to be elected to the Board. These allegations were false.

There is nothing to show that because Carla Cole is the president of the women's golf club that she has a conflict of interest or would receive a personal profit or compensation by the mere fact that she holds an officer position in a volunteer group of women who play golf. That type of logical leap is improper. The fact that people that live next door to a golf course happen to be golfers should not be surprising to anyone. Liking to play golf at an adjacent golf course is not a disqualification to serve on the Board of the Association. Ms. Cole was elected to the Board.

As to James Kepler, the fact that he is the owner of Tour Specs Golf, the owner of Dayton Valley Golf Course, is evidence of nothing. Disqualification cannot be had based on assumptions. Regardless, there is no substantiated basis to even make an assumption that just because Mr. Kepler is the owner of Tour Specs Golf that he somehow stands to personally benefit from being a member of the Board. There is no payment of any kind to the owner of the Golf Course and we have not found that there has ever been any payment of any kind to the owner of the Golf Course. There are no contracts that have been located that evidence payment or profit of any kind by the Association to the owner of the Golf Course. To the contrary, Mr. Kepler, who has been a homeowner for many years, has been subjected to vitriolic attacks by Joseph Hughes and others. Mr. Kepler was elected to the Board. If a matter becomes before the Board and that ownership poses a conflict, he would then need to recuse himself from that vote, but it doesn't preclude him from serving. Absent the identified grounds for prohibiting a member from being a candidate being present, an Association may not refuse to allow the person to be a candidate. Prior to the election, Mr. Hughes' then attorney (Mr. Loizzi has been suspended from the practice of law and is no longer Mr. Hughes's attorney) was asked to identify any matter that would result in personal profit to or compensation by Mr. Kepler. There has never been any contract or identification of any contractual relationship between Mr. Kepler and the Association that would preclude him from serving on the Association. there was no information regarding such a contractual relationship or contract and/or personal profit or compensation he would receive from a particular matter. There was no information that the Association makes monetary payments to Mr. Kepler and/or the golf course that would result in a personal profit or compensation to Mr. Kepler. Even the prior maintenance agreement was solely a benefit to the Association as the golf course did not care and still does not care if the particular area is landscaped in any way and, in any event, no funds were paid to the golf course.

Similarly, Doug Kreie's position as a stockholder in Tour Specs is *not* a basis for disqualification. His status as a stockholder does not create a personal profit or compensation. I would note that he

has been on the Board for some time and Mr. Hughes never identified any matter that he participated in that resulted in his receipt of any personal profit or compensation. Mr. Kreie was not elected to the Board.

The election packet was approved by a majority of the Board. The individual disclosure statements were included in the election packet and were viewed as part of the election packet. There was not separate action taken on the individual disclosure statements. The entire election packet was approved to be sent with certain edits to the information provided to the owners. The changes included: the word "Poll" would be changed to "Door"; the return address for the ballot was to be added to the cover letter; the word "Board" was added to organizational meeting; the Call to Order was changed to 6:00 p.m.; added additional time to accept ballots in person; and there was addition to the bottom of the agenda "The Board of Directors may take action on all items listed on the agenda". According to the draft minutes for June 9, 2021, the action taken was to approve the election packet with these editing changes. The motion made by Mr. Kreie and seconded by Paula Darragh and was, according to the draft minutes: "Doug Kreie made a motion to approve the proof from BallotBox with the above listed corrections." Neither Mr. Hughes, nor any other Board member made any motion to challenge the individual disclosure statements of any of the specific candidates so the allegation that there was a vote by a particular candidate about his or her particular disclosure is false. In addition, the discussion by Mr. Hughes and Ms. Puzzo to disqualify candidates and remove their names from the ballot did not result in any motion either.

Based on the facts and information presented, is our hope that you will close this matter. Mr. Hughes, a candidate in an election that included 16 candidates for 7 positions, had a personal interest in having fewer competitors. The challenges were without merit and, more importantly, did not involve any of the disqualifying matters identified in NRS 116.3034(10). The law recognizes that except in those limited circumstances, any unit owner may be a candidate for election to the Board of a common interest community. Disqualification is a serious and exceptional issue that should not be treated lightly. The unsupported allegations of some vague and unsubstantiated claim of personal profit or compensation when there is no evidence of any compensation of any kind by the Association in all the years of its existence should not form the basis of a disqualification.

We look forward to your continuing professional courtesies. If there is anything you would like to discuss, please do not hesitate to contact me.

Sincerely,

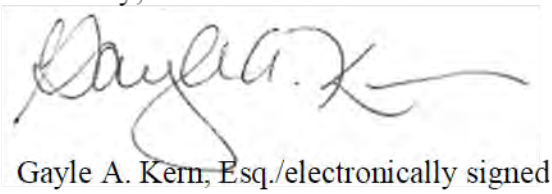

Gayle A. Kern, Esq./electronically signed

c: Client

STEVE SISOLAK
Governor

STATE OF NEVADA
DEPARTMENT OF BUSINESS AND INDUSTRY
REAL ESTATE DIVISION
COMMON-INTEREST COMMUNITIES AND
CONDOMINIUM HOTELS PROGRAM
CICOmbudsman@red.nv.gov
http://www.red.nv.gov

TERRY REYNOLDS
Director

SHARATH CHANDRA
Administrator

CHARVEZ FOGER
Ombudsman

August 9, 2021

Dayton Valley Community Association
Dennis Drury
C/O CAMCO
Attn: Julie Thompson
Po Box 400518
Las Vegas, Nv 89140

Via U.S. Certified Return Receipt Mail # 7018 1130 0001 6026 8482

Case No: 2021-761

Dear Mr. Drury:

The State of Nevada Real Estate Division (the "Division"), Compliance Section for Common-Interest Communities and Condominium Hotels, has received a complaint against the executive board of the **Dayton Valley Community Association**, and the Division has opened an investigation to determine if there has been a violation of Nevada Revised Statutes (NRS) 116 or Nevada Administrative Code (NAC) 116. The actual complaint is confidential in accordance with NRS 116.757.

Please provide a written response to the following allegations:

Allegation 1: It is alleged that you *"NRS 116.3103 Failure to exercise fiduciary responsibility and act in the best interest of the membership by not properly reviewing candidate disclosure statements. Allowing Board member to motion for vote and vote on matter that board member was directly the subject matter of review of their own omissions.*

It is alleged that your actions are a violation of **NRS 116.3103 and NRS 116.31034(9)(a) and (10)**.

Allegation 2: It is alleged that you *"NRS 116.31034(9)(a)(9) each person who is nominated as a candidate for membership on the executive board pursuant to subsection 4 must: (a) Make a good*

faith effort to disclose any financial, business, professional or personal relationship or interest that would result or would appear to a reasonable person to result in a potential conflict of interest for the candidate if the candidate were to be elected to serve as a member of the executive board.

It is alleged that your actions are a violation of **NRS 116.31034(9)(a)**.

Allegation 3: It is alleged that you *"NRS 116.31034(10)(a)(2)(10) Except as otherwise provided in subsections 11 and 12, unless a person is appointed by the declarant (a) A person may not be a candidate for or member of the executive board or an officer of the association if: 2) The person stands to gain any personal profit or compensation of any kind from a matter before the executive board of the association."*

It is alleged that your actions are a violation of **NRS 116. 31034(10)(a)(2)**.

Please provide a written response to these allegations, along with evidence and/or information and/or witness contact information (If any), to corroborate your response to the allegations.

Please provide all documents or other evidence to support your written response.

Your written response and the requested documentation must be submitted to the Division to the undersigned's attention no later than **10 business days from the date of this letter.**

Please be advised that pursuant to NAC 116.405(5), the Commission may find that a member of the executive board violated his or her duties pursuant to NRS 116.3103 by impeding or otherwise interfering with an investigation by the Division. NAC 116.405(5) states in part:

In determining whether a member of the executive board has performed his or her duties pursuant to NRS 116.3103, the Commission may consider whether the member of the executive board has:

5. Impeded or otherwise interfered with an investigation of the Division by:

(a) Failing to comply with a request by the Division to provide information or documents;

(b) Supplying false or misleading information to an investigator, auditor or any other officer or agent of the Division; or

(c) Concealing any facts or documents relating to the business of the association.

Upon review of the requested documents, the undersigned may be contacting you for further information and/or an interview.

Thank you in advance for your anticipated cooperation. Should you have any questions, you may contact me at 702-486-4480, or you may e-mail me at cmstaffen@red.nv.gov.

Sincerely,

Christy Staffen

_____
Compliance Audit Investigator II

Cc:

Sandy Mass
285 La Costa Ave
Dayton, Nv 89403

Paula Darragh
211 Portruch Ct.
Dayton, Nv 89403

Doug Kreie
144 Sawgrass Ln.
Dayton, Nv 89403

Amy Puzzo
908 Lakeview Dr.
Dayton, Nv 89403

Joseph Hughes
905 Lakeview Dr.
Dayton Valley, Nv 89403

Case 2021-761

Allegation #1

Exhibit #10

Exhibit #10
Pg 1

LKG LEACH | KERN | GRUCHOW ANDERSON | SONG

Gayle A. Kern, Esq.

Reply to: Reno

July 1, 2021

Via Certified and First-Class Mail

Joseph F. Hughes
905 Lakeview Drive
Dayton, NV 89403

Re: *Dayton Valley Community Association*
Notice of Intent to File Form 530

Dear Mr. Hughes:

As you are aware, I represent Dayton Valley Community Association ("Association"). The Board has requested I respond to the second "notice of intention to file Form 530 Intervention Affidavit" that you have sent this month. This one was dated June 25, 2021, which the Association's Community Manager received on June 28, 2021.

As a preliminary matter, your notice of intent does not meet the minimum required conditions necessary to be able to file an Intervention Affidavit. Specifically, your letter fails to identify a deadline by which you expect a response from the Association. The Intervention Affidavit Form 530 specifically requires that you must "provide the Respondent with at least 10 business days to correct the alleged violation(s) pursuant to governing documents or NRS and NAC 116." *See* page 1, section 3 of Form 530. Please be advised that we will seek to dismiss any Intervention Affidavit that is filed without first satisfying the required criteria set forth in Form 530. However, despite your failure to comply with the necessary prerequisites to file an Intervention Affidavit, because your notice includes several unsubstantiated and flawed allegations that the Board of Directors purportedly violated provisions of NRS Chapter 116 relating to opposing candidate's "Candidate Disclosure Statements" in the upcoming election, I have been asked to respond, once again.

You claim that the Board is in breach of its fiduciary responsibility for the following reasons: (1) The issues surrounding the "Candidate Disclosure Statement" were apparently not discussed to your satisfaction; (2) You believe the Board should not have voted to accept your competitors' Candidate Disclosure Statements because you perceive them to have possible conflicts of interest; and (3) You claim the same candidates were inappropriately placed on the Annual Meeting Ballot. Your complaints and allegations are legally baseless and without merit.

You fail to understand that a conflict of interest is merely a ***disclosure*** issue and not a disqualification issue. The Association has absolutely no authority to refuse to include a name on the ballot, and every member has the right to be a candidate for the Board, ***unless*** that member is disqualified by one of the specifically enumerated disqualifying items identified in NRS

Exhibit #10
Pg 2

116.31034(10)(a). The bases for disqualification, in which a person may not be a candidate for or member of the executive board or an officer of the association under NRS 116.31034(10)(a) are limited to three distinct items and are set forth below:

> (1) The person resides in a unit with, is married to, is domestic partners with, or is related by blood, adoption or marriage within the third degree of consanguinity or affinity to another person who is also a member of the executive board or is an officer of the association;
>
> (2) The person stands to gain any personal profit or compensation of any kind from a matter before the executive board of the association; or
>
> (3) The person, the person's spouse or the person's parent or child, by blood, marriage or adoption, performs the duties of a community manager for that association.

None of the claims you make against your competitors include these enumerated disqualifying items, and you must recognize that your unsupported belief that a conflict of interest may exist is not a disqualifying item as identified in NRS 116.31034(10)(a).

To the extent your complaint is centered on your belief that each of the candidates somehow stand to gain personal profit or compensation from a matter before the Board, such a claim is pure speculation and without merit. You have failed to identify or articulate any matter before the Board that would tend to show or support any claim that the candidates singled out in your letter would gain some personal profit by sitting on the Board. Striking these candidates, *who are your competitors*, from the ballot based on nothing more than your unsubstantiated claims would likely be construed as tampering with an election. Your complaints appear to be nothing more than a self-serving attempt to reduce the candidate field for your own benefit.

If a homeowner or group of homeowners do in fact believe that a statutorily required disclosure has not been met and/or a conflict is present that was not addressed or identified in the Candidate Disclosure Statement, there are options and remedies available to address those concerns. However, under the circumstances, the Association will not take away any of the current Owners' rights to be a candidate for the Board because there is no showing that any member will stand to gain a profit or receive compensation by becoming a Board member.

As to James Kepler, the fact that he is the owner of Tour Specs Golf, the owner of Dayton Valley Golf Course, is evidence of nothing. He notes that he is the new owner of the golf course in the Candidacy Disclosure Statement. In his expanded statement, he discloses: "In December 2020, with the support of Dayton Valley homeowners and outside investors, we completed the purchase of Dayton Valley Golf Course. As such, I have a vested interest in seeing the community continue to flourish." Disqualification cannot be had based on assumptions.

Exhibit #10
Pg 3

Similarly, Doug Kreie's position as a stockholder in Tour Specs is *not* a basis for disqualification. He provided the information that he is a minority stockholder in Tour Specs in the Candidacy Disclosure Statement.

In your letter, you allege that the Landscape Maintenance Easement that was recorded on January 15, 2020 and then revisited on January 27, 2021 evidences that Mr. Kreie and Mr. Kepler stand to gain personal profit or compensation of any kind from a matter before the executive board of the association. The Landscape Maintenance Easement was first addressed in July of 2019. At that time, I was advised that the Board was concerned about portions of the golf course that the golf course did not maintain and had no intention to do so because it was of no benefit to the golf course to maintain the areas in question. The understanding was that because the golf course did not benefit from the landscaping in those areas, the golf course did not desire to provide any maintenance. On the other hand, various Owners had expressed concern to the Board that the lack of maintenance was a concern and that the Owners would benefit from such landscaping. Because it was my opinion that under the Second Amended Declaration, the Association did not have affirmative maintenance responsibilities on the areas in question, if the Board determined it was beneficial to have the landscaping done, there would need to be a Landscape Maintenance Easement executed and recorded. While there were some areas that were required to be maintained by the Association if they were drainage facilities, the areas in question did not include these drainage facilities. It was my understanding that the Board determined it was in the best interests of the Association, not the golf course, to have the right, but not the obligation to maintain the areas that were of concern by members of the Association. Therefore, a Landscape Maintenance Easement was prepared and recorded on January 15, 2020. Thereafter, the issue arose again. The Board discussed and voted on whether it was still of a benefit to the Association to exercise its rights under the Landscape Maintenance Easement. In January of this year, a majority of the Board determined it was not of a benefit to the Association and the Association no longer exercised its rights to maintain the landscaping areas identified in the Landscape Maintenance Easement. Reasonable people can disagree about whether it was in the best interests of the Association to maintain an area that the golf course simply did not care about. However, there is no information that the Board made its decision to benefit the golf course. To the contrary, the information that was provided by the Board was that the golf course saw no benefit to the maintenance of the areas in question and that the members of the Association derived the sole benefits from the maintenance of the areas in question.

At all times relevant, the Board has adhered to its fiduciary duties owed to the Association. Therefore, the remedies you demand, which include removing the aforementioned candidates from the Election Package and Ballot, nullifying the votes for the aforementioned candidates, and the issuance of an explanation and apology to the membership, are each denied and rejected. No candidates will be removed from the ballot, nor will the votes of members for these candidates be nullified as there is no legal or justified basis for doing so. The Board must comply with Nevada law and your demands run afoul of the Board's legal duties and obligations under NRS Chapter 116.

I hope that this will bring an end to your baseless complaints, and for the reasons set forth above, you will refrain from filing the meritless Intervention Affidavit. Your conduct is

Exhibit #10
Pg 4

unfortunately forcing the Association to incur unnecessary fees and costs to respond to your frivolous claims and is causing unnecessary delay in proceeding with the election.

The Association and the Board will continue to conduct its business, take enforcement action as necessary and defend itself from any interference in the election.

Sincerely,

Gayle A. Kern, Esq./electronically signed

c: Client

Case 2021-761

Allegation #1

Exhibit #9

Exhibit #9
Pg 1

LKG LEACH | KERN | GRUCHOW ANDERSON | SONG

Gayle A. Kern, Esq.

Reply to: Reno

June 21, 2021

Via Certified and First-Class Mail

Joseph F. Hughes
905 Lakeview Drive
Dayton, NV 89403

Re: *Dayton Valley Community Association*
Notice of Intent to File Form 530

Dear Mr. Hughes:

As you are aware, I represent Dayton Valley Community Association ("Association"). The Board has requested I respond to your "notice of intention to file Form 530 Intervention Affidavit" dated June 10, 2021, which the Association's Community Manager received on June 11, 2021.

As a preliminary matter, your notice of intent does not meet the minimum required conditions necessary to be able to file an Intervention Affidavit. Specifically, your letter fails to identify a deadline by which you expect a response from the Association. The Intervention Affidavit Form 530 specifically requires that you must "provide the Respondent with at least 10 business days to correct the alleged violation(s) pursuant to governing documents or NRS and NAC 116." *See* page 1, section 3 of Form 530. Please be advised that we will seek to dismiss any Intervention Affidavit that is filed without first satisfying the required criteria set forth in Form 530. However, despite your failure to comply with the necessary prerequisites to file an Intervention Affidavit, because your notice includes several unsubstantiated and flawed allegations that the Board of Directors purportedly violated provisions of NRS Chapter 116 relating to opposing candidate's "Candidate Disclosure Statements" in the upcoming election, I have been asked to respond.

You claim that the Board is in breach of its fiduciary responsibility for the following reasons: (1) The issues surrounding the "Candidate Disclosure Statement" were apparently not discussed to your satisfaction; (2) You believe the Board should not have voted to accept your competitors' Candidate Disclosure Statements because you perceive them to have possible conflicts of interest; and (3) You claim the same candidates were inappropriately placed on the Annual Meeting Ballot. Your complaints and allegations are legally baseless and without merit.

You fail to understand that a conflict of interest is merely a ***disclosure*** issue and not a disqualification issue. The Association has absolutely no authority to refuse to include a name on the ballot, and every member has the right to be a candidate for the Board, ***unless*** that member is disqualified by one of the specifically enumerated disqualifying items identified in NRS 116.31034(10)(a). The bases for disqualification, in which a person may not be a candidate for or

Exhibit #9
Pg 2

member of the executive board or an officer of the association under NRS 116.31034(10)(a) are limited to three distinct items and are set forth below:

> (1) The person resides in a unit with, is married to, is domestic partners with, or is related by blood, adoption or marriage within the third degree of consanguinity or affinity to another person who is also a member of the executive board or is an officer of the association;
>
> (2) The person stands to gain any personal profit or compensation of any kind from a matter before the executive board of the association; or
>
> (3) The person, the person's spouse or the person's parent or child, by blood, marriage or adoption, performs the duties of a community manager for that association.

None of the claims you make against your competitors are included these enumerated disqualifying items, and you must recognize that your unsupported belief that a conflict of interest may exist is not a disqualifying item as identified in NRS 116.31034(10)(a).

To the extent your complaint is centered on your belief that that each of the candidates somehow stand to gain personal profit or compensation from a matter before the Board, such a claim is pure speculation and without merit. You have failed to identify or articulate any matter before the Board that would tend to show or support any claim that the candidates singled out in your letter would gain some personal profit by sitting on the Board. Striking these candidates, *who are your competitors*, from the ballot based on nothing more than your unsubstantiated claims would likely be construed as tampering with an election. Your complaints appear to be nothing more than a self-serving attempt to reduce the candidate field for your own benefit.

If a homeowner or group of homeowners do in fact believe that a statutorily required disclosure has not been met and/or a conflict is present that was not addressed or identified in the Candidate Disclosure Statement, there are options and remedies available to address those concerns. However, under the circumstances, the Association will not take away any of the current owners' rights to be a candidate for the Board because there is no showing that any member will stand to gain a profit or receive compensation by becoming a Board member.

There is nothing to show that because Carla Cole is the president of the women's golf club that she has a conflict of interest or would receive a personal profit or compensation by the mere fact that she holds an officer position with a golf club. That type of logical leap is improper.

As to James Kepler, the fact that he is the owner of Tour Specs Golf, the owner of Dayton Valley Golf Course, is evidence of nothing. Disqualification cannot be had based on assumptions. Regardless, there is no substantiated basis to even make an assumption that just because Mr. Kepler is the owner of Tour Specs Golf that he somehow stands to personally benefit from being a member of the Board.

Exhibit #9
Pg 3

Similarly, Doug Kreie's position as a stockholder in Tour Specs is *not* a basis for disqualification. His status as a stockholder does not create a personal profit or compensation. I would note that he has been on the Board and you have not identified any matter that he participated in that resulted in his receipt of a any personal profit or compensation.

Roger Rocha answered in the affirmative that there was a conflict but did not offer an explanation. That omission is not a basis for disqualification. If a candidate fails to disclose some issue and is elected, there are remedies regarding such a failure, but the remedy is not disqualification as a candidate. Again, disqualification is limited to those specific enumerated items identified NRS 116.31034(10)(a).

Your complaint that Steve Simoni's Candidacy Disclosure Statement is "missing the second page needed for Board approval" is clearly not a basis for disqualification as it is not one of the issues identified in ~~NRS 116.31034(10)~~(a).

Richard Wilde left Question 1 blank, which is evidence of that he made no affirmative disclosure of any conflict. The question requires disclosure. If there is nothing to disclose, leaving it blank would be in compliance with the disclosure requirements. We remain unclear of what specifically you take issue with other than simply trying to get rid of potential competition.

At all times relevant, the Board has adhered to its fiduciary duties owed to the Association. Therefore, the remedies you demand, which include removing the aforementioned candidates from the Election Package and Ballot, nullifying the votes for the aforementioned candidates, and the issuance of an explanation and apology to the membership, are each denied and rejected. No candidates will be removed from the ballot, nor will the votes of members for these candidates be nullified as there is no legal or justified basis for doing so. The Board must comply with Nevada law and your demands run afoul of the Board's legal duties and obligations under NRS Chapter 116.

I hope that this will bring an end to your baseless complaints, and for the reasons set forth above, you will refrain from filing the meritless Intervention Affidavit. Your conduct is unfortunately forcing the Association to incur unnecessary fees and costs to respond to your frivolous claims and is causing unnecessary delay in proceeding with the election.

The Association and the Board will continue to conduct its business, take enforcement action as necessary and defend itself from any interference in the election.

Sincerely,

Gayle A. Kern, Esq./electronically signed

c: Client

STEVE SISOLAK
Governor

TERRY REYNOLDS
Director

SHARATH CHANDRA
Administrator

CHARVEZ FOGER
Deputy Administrator

JASON O. WYATT
Ombudsman

STATE OF NEVADA
DEPARTMENT OF BUSINESS AND INDUSTRY
REAL ESTATE DIVISION
COMMON-INTEREST COMMUNITIES AND
CONDOMINIUM HOTELS PROGRAM
CICOmbudsman@red.nv.gov
http://www.red.nv.gov

July 18, 2022

Via Certified Mail Return Receipt Requested
7019 1120 0001 7373 3276

Dayton Valley Community Association
Dennis Drury
C/O CAMCO
Attn: Julie Thompson
Po Box 400518
Las Vegas, Nv 89140

Re: Case No. 2021-696 and 2021-761; Dayton Valley Community Association (the "Association")

Dear Mr. Drury and Board of Directors:

This letter is a follow-up to an investigation by the Division concerning the above-referenced case numbers.

In July of 2021, James H. Kepler SR was elected to the Association's board of directors. Since that time, the Association has allocated assessment funds to maintain the guard shack and road located at the Palmer Gate exit. These elements are not included in the plat map of the Association, and they are not identified as common elements required to be maintained by the Association.

It is alleged that the guard shack and road located at the Palmer Gate exit of the community are currently owned by Tour Specs Golf Management (Aka: Dayton Valley Golf Course). Public records indicate that the sole principal of Tour Specs Golf Management is Reliance Golf Management, and as of July 19th, 2017, Reliance Golf Management has been owned by James H. Kepler, SR.

It is alleged that through the allocation of funds from the Association for maintenance of property not owned or required to be maintained by the Association, James H. Kepler, SR, the owner of Reliance Golf Management, stands to gain from his position on the executive board.

Pursuant to NRS 116.31034(10)(a)(2), "except as otherwise provided in subsections 11 and 12, unless a person is appointed by the declarant: a person may not be a candidate for or member of the executive board or an officer of the association if the person stands to gain any personal profit or compensation of any kind from a matter before the executive board of the association." Further, pursuant to NRS 116.31034(13), "if a person is not eligible to be a candidate for or member of the executive board or an officer of the association pursuant to any provision of this chapter, the association:

(a) Must not place his or her name on the ballot; and

(b) **Must prohibit such a person from serving as a member of the executive board or an officer of the association**."

The executive board has failed to cooperate with the Division in resolving this matter by refusing to comply with the Compliance Demand Letter issued on August 27, 2021, instructing Mr. Kepler to either resign or be removed by the board. As of October 20, 2021, Mr. Kepler remains a Dayton Valley Community Association board member and the Association continues to maintain the golf course property.

The Division has obtained sufficient evidence to commence a disciplinary action against each of you as well as the Association and intends to do so by filing a complaint for hearing before the Commission for Common-Interest Communities and Condominium Hotels (the "Commission"). The violations alleged will include, but may not be limited to:

- NRS 116.31034
- NRS 116.3103
- NAC 116.405

Pursuant to NRS 116.785, if the Commission determines violations of law occurred, it may impose fines of up to $1,000 per violation. Additionally, the costs of the investigation and hearing, including attorney's fees, may be recovered. Failure to pay these sums in a timely manner may result in the institution of collection proceedings. Any documentation or other evidence you have to support your compliance with the above provisions should immediately be brought to the undersigned's attention. Upon consultation with its counsel, the Attorney General, the Division may be willing to resolve this matter through a negotiated settlement. This type of settlement must be presented to and approved by the Commission.

Sincerely,

Terry Wheaton

Chief Compliance Audit Investigator

cc.
Dennis Drury
662 St. Andrews Dr.
Dayton, NV 89403

Carla Cole
653 Saint Andrews Dr.
Dayton, NV 89403

Sandy Mass
285 La Costa Avenue
Dayton, NV 89403

Joan Latimer
104 Poppy Hills Court
Dayton, NV 89403

Steve Gallisdorfer
518 Stonehaven Court
Dayton, NV 89403

James Kepler
681 Saint Andrews Drive
Dayton, NV 89403

Michelle Carr
339 Bayhill Circle
Dayton, NV 89403

Gayle A. Kern, Esq. Reply to: Reno

September 29, 2021

Via email to csmstaffen@red.nv.gov and first class mail

Christy Staffen
State of Nevada Department of Business and Industry
Real Estate Division
Office of the Ombudsman
3300 West Sahara Avenue, Suite 325
Las Vegas, Nevada 89102

Re: *Dayton Valley Community Association*
File Number 2021-696 and 2021-761

Dear Ms. Staffen:

As you know, this law firm represents Dayton Valley Community Association ("Association" or "DVCA") and has been retained by the Board of Directors ("Board") to respond to your letter of August 27, 2021 regarding Case No. 2021-696 and Case No. 2021-721 with the Nevada Real Estate Division ("Division").

We appreciate the additional communications we have had regarding the matter. As we discussed, there is no issue of annexation. The roads of DVCA, including Palmer Drive and the improvements on Palmer Drive are annexed. Rather, the issue is the failure of Lyon County to provide for a separate parcel or parcels for the various roads within the subdivision that are the responsibility of the Association, whether owned or by virtue of easements, as reflected in the governing documents. As I explained, the County is working with the Association to correct the problem with the correct identification of the roads. The problem is a result of the multiple declarants, developers and age of the Association. There is no dispute the roads are the responsibility of the Association and Lyon County recognizes this responsibility. In fact, a conference is currently being scheduled to address the situation among all of the department heads of the County on October 1.

Despite the fact that Tour Specs Golf Management, LLC, a Nevada Limited Liability Company, the current owner of the adjacent Dayton Valley Golf Course had nothing to do with the creation of the problem, has no legal responsibility for maintenance of any of the roads or portions of the roads within DVCA, the Division has determined that any "stakeholder" of Tour Specs Golf Management, LLC is prohibited from serving on the Board of the Association. There

is no legal term related to a limited liability company identifying anyone involved as a stakeholder. *See generally* Chapter 86 of the Nevada Revised Statutes. Therefore, it is unclear what a stakeholder is intended to reference. Regardless of this confusion, the Division has determined that any stakeholder would receive profit or compensation from the Association in violation of NRS 116.31034(10)(a)(2). When asked to explain what profit or compensation Mr. Kepler is alleged to be receiving from the Association, it was identified that: "It is the Division's position that as long as the Lyon County Assessor's office reports the property in question as owned by Tour Specs, individuals owning Tour Specs stand to gain personal profit or compensation as the Association is maintaining that portion of property." The portion of the property in question are the roads of the Association and the improvements thereon, property the Association has maintained since its inception and property for which the Association has provided for in the substantial Reserve Study. The maintenance has spanned decades and did not arise from any action by Tour Specs. More importantly, the roads are required to be maintained by the governing documents of DVCA.

Mr. Kepler's attorney, Joel Locke, and Mr. Kepler have confirmed that Mr. Kepler will not resign because he, as a unit owner, receives no profit or compensation. Further, we have been advised, as a candidate, Mr. Kepler received the most votes in the last election. He disclosed his ownership interest in the golf course. The Division's instruction that Mr. Kepler should resign or be prevented from serving as a member of the Board deprives Mr. Kepler of his right as a unit owner to serve and deprives the owners that cast a vote for him of their choice.

To be clear, NRS 116.31034(10)(a)(2) states as follows: "The ***person*** stands to gain any personal profit or compensation of any kind from a matter before the executive board of the association. . . ." Mr. Kepler confirms he has not received any personal profit or compensation of any kind from the Association. Tour Specs Golf Management, LLC owns the real property upon which the golf course is situated. The manager of Tour Specs Golf Management, LLC as included in the records of the Nevada Secretary of State is Reliance Golf Management, LLC. Reliance Golf Management, LLC is a Nevada limited Liability Company. Mr. Locke advises that Reliance Golf Management, LLC owns Reliance Golf Management Dayton Valley Management, LLC and that it has a Consulting Agreement with Tour Specs Golf Management, LLC to run the golf course. I have been advised that none of these entities receive profit or compensation from the Association.

In the event that Mr. Kepler does not resign, the Division has stated the Board must take action to remove Mr. Kepler. However, the Board does not have authority to remove a lawfully elected Board member without specification of the alleged profit and compensation that the Association is alleged to be paying Mr. Kepler. Each unit owner is entitled to be a member of the Board. In order to prevent a person from serving on the Board, there would need to be specific documents supporting one of the three items of disqualification. As clarified by the Division, the only item of disqualification at issue is whether or not Mr. Kepler receives personal profit or compensation because the Association maintains all of the roads, including those within the properties owned by Tour Specs Golf Management, LLC. Mr. Kepler contends the maintenance of the roads do not constitute a personal profit or compensation to Mr. Kepler. The law recognizes that except in those three limited circumstances specified in NRS 116.3034(10), any unit owner

may be a candidate for election to the Board of a common interest community and may serve on the Board. Disqualification is a serious and exceptional issue that should not be treated lightly.

There is no dispute that since approximately 1990 to the present, the Association has maintained the common elements of the Association, which include the areas that the Association is required to maintain, even if not owned by the Association. The ownership of the roads is, quite simply, irrelevant. Therefore, it is difficult to understand the assertion that the Association's compliance with the required maintenance under the governing documents would constitute profit or compensation to an individual unit owner, in this case Mr. Kepler.

To be very clear, Paragraph 7.1(d) of the Second Amended and Restated Declaration of Covenants, Conditions and Restrictions for Dayton Valley Country Club, recorded July 23, 2010 as Document No, 462667 (the "CC&Rs") states quite clearly that DVCA is responsible for maintaining all roadways within the Development, whether owned or not by the Association:

> (d) Roadways. The Association shall maintain and keep in good repair all roadways within the Development, which are owned by the Association not located on individual Lots or otherwise maintained by the ***County or over which the Association and Owners have an access easement*** by reason of their deed or this Declaration.

I suggest that the Division should also review the many subdivision maps which were recorded effecting DVCA beginning in 1987 and continuing through 2006. I attach a worksheet summarizing the relevant provisions of the subdivision maps. It has been a complicated history and this was very time-consuming. After thoroughly reviewing all of the subdivision maps mentioned, there is no question the roads within the Association are intended to be private but subject to the granting of public road easements. The first developer of a subdivision Unit within DVCA, John Lawrence (Nevada), Inc., also developed Airpark Estates located adjacent to the southern boundary of DVCA in the late 1980s. Most probably the Lawrence entity granted the access easement across the private roads within early Units to Airpark Estates in the late 1980s or early 1990s. However, these records are not available without a formal title search because online records of the Lyon County Recorder are not available for documents recorded before 1993. *See* further discussion below. A member of my staff did an online search of recorded documents for Dayton Valley Country Club, Dayton Valley Community Association, and Dayton Valley Investors. There was one deed recorded by John Lawrence Nevada, Inc., to DVCA in 1995 covering lots A, B, C, D, and E of Dayton Valley County Club Unit 4. These are all common area lots, not roads. Although the roads are clearly identified on the recorded subdivision maps and the members of DVCA and the Association have easements across the roads, they were not conveyed to the Association.

Lyon County does not assign parcel numbers to roads. Recorded easement deeds over the roads within DVCA have contained both metes and bounds descriptions of the roadways. *See e.g.* Exhibit "A" to the 2010 Access and Utility Easement Deed attached hereto, as well as the summary descriptions of the roads contained on Exhibit "A" to the 2014 Grant of Access and Utility Easement Deed which is also attached.

The Board takes its responsibilities very seriously. However, if it were to take action without documentation of personal profit or compensation received by Mr. Kepler, it would be in violation of NRS 116.3103 and NRS 116.31036. Accordingly, in order to ensure that this is not done, please provide the documents that evidence the personal profit or compensation you allege Mr. Kepler receives as a result of DCVA's compliance with Paragraph 7.1(d) of the CC&Rs.

Sincerely,

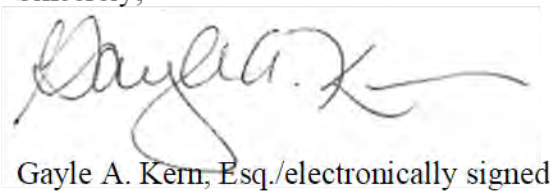

Gayle A. Kern, Esq./electronically signed

Enclosures
c: Client
Joel Locke, Esq.

Unit Description	Map Info	Owner/Engineer	Status	Named Roads	Notes on Map
DVCC Unit 1	Doc. No. 126598; Recorded August 17, 1989	John Lawrence Nevada, Inc. Thiel, Winchell & Assoc., Inc.	Permanently Revoked 1.31.1999	Streets A, B, C, D; Lots 1-28, Common Area Lots A, B, C, and one Alandscape area@	All roads within this Unit are to be **public** utility, sanitary sewer, drainage and access easements per NRS 278-A
DVCC Unit 2 Dec. Of Annex-Doc. 138134	Doc. No. 138166, recorded December 6, 1990	John Lawrence Nevada, Inc. Thiel, Winchell & Assoc., Inc.	Permanently Revoked 1.31.1999	Bayhill Circle, Gleneagles Court, Andrews Drive, Lots 29 - 73	All roads within this Unit are to be **public** utility, sanitary sewer, drainage and access easements per NRS 278-A
DVCC Unit 2B Dec. Of Annex-Doc.161015; Lot 95- Doc 161198	Doc. No. 151220, recorded May 7, 1992	John Lawrence Nevada, Inc. Thiel, Winchell & Assoc., Inc.	Permanently Revoked 1.31.1999	Bayhill Circle, Lots 92-95, 114-115 inclusive	All roads within this Unit are to be **public** utility, sanitary sewer, drainage and access easements per NRS 278-A
DVCC Unit 2C Dec. Of Annex-Doc. 168210	Doc. No. 161360, recorded May 20, 1993	John Lawrence Nevada, Inc. Thiel, Winchell & Assoc., Inc.	Permanently Revoked 1.31.1999	Bayhill Circle, (Private) Cyress Ct. (Private) Riviera Ct.,(Private) Lots 86-91, 109-113 inclusive	AAll roads within this Unit are to be **private,** public utility, sanitary sewer, drainage and access easements per NRS 278-A@
DVCC Unit 2E Cannot find recorded Dec. Of Annex but referenced in 1st Amd. Rest. CC&Rs - Doc 285888	Doc. No 194108, recorded June 6, 1996	John Lawrence Nevada, Inc. Sierra Resource Engineering, Inc.	Permanently Revoked 1.31.1999	Bayhill Circle, Pebble Beach Ct., Doral Ct., Palmer Drive Lots 116-131 inclusive. No statements on Map re: roads being public or private. But later maps show streets as private.	

DVCC Unit 2F Dec. Of Annex- Doc 310036	Doc. No. 308216, recorded November 13, 2003	Dayton Valley Investors, LLC** Summit Engineering	** See detailed information at end of sheet	ASt. Andrews Dr. (Private) Kingsbarn Ct. (Private)@, Lots 1-12 Defined as Common Area in Dec. Of Annexation	AThe roads shown hereon are to remain private with an easement granted for access and utility use.@AThe City, County, School District and Special Districts are Not obligated to furnish any service, specifically mentioning fire protection and roads. . .@
DVCC Unit 2G Dec. Of Annex- Doc 329909; also Doc. 367901	Doc. No. 318692, recorded April 20, 2004	Dayton Valley Investors, LLC	** See detailed information at end of sheet	St. Andrews Drive, Carnoustie Ct. (Private), Lots 13-35, inclusive Defined as Common Area in Dec. Of Annex.	AThe roads shown hereon are to remain private with an easement granted for access and utility use.@ AThe City, County, School District and Special Districts are Not obligated to furnish any service, specifically mentioning fire protection and roads. . .@
DVCC Unit 2H Dec. Of Annex- Doc 396147	Doc. No. 350061, Recorded May 5, 2005	Dayton Valley Investors, LLC Summit Engineering	Parcels A and B were Quitclaimed to DVCA on May 5, 2005 via Deed, Doc, 350061	Parcels A and B, Stonehaven Court (Private), Lots 36-78, inclusive Streets and A and B defined as common area in Dec of Annex.	AStonehaven Court- private access easement per Doc No. _____@. AThe roads shown hereon are to remain private with an easement granted for access and utility use.@ AThe City, County, School District and Special Districts are not obligated to furnish any service, specifically mentioning fire protection and roads. . .@
DVCC Unit 3A Dec. Of Annex Doc. 168210	Doc. No. 162948, recorded July 16, 1993	John Lawrence Nevada, Inc. Thiel, Winchell & Assoc., Inc.	Permanently Revoked 1.31.1999	La Costa Avenue, Royal Troon Drive, Sawgrass Lane, Sawgrass Ct., Lots 159-203 inclusive	All roads within this Unit are to be **public** utility, sanitary sewer, drainage and access easements per NRS 278-A

DVCC Unit 3B Dec. Of Annex Doc 212411	Doc. No. 183173, recorded June 15, 1995	John Lawrence Nevada, Inc. Sierra Resource Engineering, Inc.	Permanently Revoked 1.31.1999	La Costa Cir., La Costa Ave., Lot A, Lots 98-127	AAll roads within this Unit are to be **public** utility, sanitary sewer, drainage and access easements per NRS 278-A.@ ALot A is public utility parking and landscaping easement and is to be maintained by the homeowners association.@
DVCC Unit 3C Dec. Of Annex Doc 287810	Doc. No. 303551, recorded Sept 4, 2003	Riverview Estates, LLC Summit Engineering	Permanently revoked. Former mangr, James F. Bawden, P.O. Box 121 Genoa NV 89411	La Costa Ave (Private), La Costa Cir. (Private) La Costa Ct. (Private), Lots 1-50, inclusive Streets defined as common area in Dec. Of Annex.	AThe roads shown hereon are to remain private with an easement granted for access and utility use.@ AThe City, County, School District and Special Districts are Not obligated to furnish any service, specifically mentioning fire protection and roads. . .@
DVCC Unit 4 Dec. Of Annex Doc. 161015	Doc. No. 156206, recorded Nov. 5, 1992	John Lawrence Nevada, Inc. Thiel, Winchell & Assoc., Inc.	Lots A, B, C, D, and E conveyed to DVCA by John Law. via Deed Doc. 181423	Palmer Drive, La Costa Ave, Sawgrass Lane, Royal Troon Drive, Lots 116 -158, ALots A, B, C, D, & E@	All roads within this Unit are to be **public** utility, sanitary sewer, drainage and access easements per NRS 278-A. ALots A, B, C, D, & E are public utility, parking and landscaping easements and are to be maintained by the homeowners association.@
DVCC Unit 5A Dec. Of Annex Doc. 272538	Doc. No. 257889, recorded April 19, 2001	Dayton Valley Investors, LLC ** Summit Engineering	** See detailed information at end of sheet	Inverness Ct (Private) Cypress Pt. Dr (Private) Poppy Hills Ct. (Private), Lots 1-36	AThe roads shown hereon are to remain private with an easement granted for access and utility use.@ AThe City, County, School District and Special Districts are Not obligated to furnish any service, specifically mentioning fire protection and roads. ..@

DVCC Unit 5B Dec. Of Annex Doc. 285538	Doc. No. 279806, recorded July 18, 2002	Dayton Valley Investors, LLC Summit Engineering	** See detailed information at end of sheet	Grayhawk Drive (Private) St. Andrews Dr. (Private) Preswick Ct. (Private) Muirfield Ct. (Private) Canterbury Ct. (Private) Lakeview Dr. (Private) Cypress Pt. Dr.(Private) Lots 37-83, inclusive Streets defined as c.a. in Dec. Of Annex.	AThe roads shown hereon are to remain private with an easement granted for access and utility use.@ AThe City, County, School District and Special Districts are Not obligated to furnish any service, specifically mentioning fire protection and roads. . .@
DVCC Unit 5C Numerous Dec of Annex for individual lots- See file	Doc. No. 307894, recorded November 7, 2003	Dayton Valley Investors, LLC Summit Engeering	** See detailed information at end of sheet	Lahinch Ct. (Private) Grayhawk Dr. (Private) Portrush Ct. (Private) Turn berry Ct. (Private) Ballybunion Dr. (Private) Lots 84-126 inclusive.	AThe roads shown hereon are to remain private with an easement granted for access and utility use.@ AThe City, County, School District and Special Districts are Not obligated to furnish any service, specifically mentioning fire protection and roads. . .@
DVCC Unit 5D Dec of Annex Doc. 334888	Doc. No. 332794, recorded October 7, 2004	Dayton Valley Investors, LLC. Summit Engineering	** See detailed information at end of sheet	St. George=s Ct. (Private) Grayhawk Dr.(Private), Lots 1-10 inclusive Streets defined as common area in Dec. Of Annex.	AThe roads shown hereon are to remain private with an easement granted for access and utility use.@ AThe City, County, School District and Special Districts are not obligated to furnish any service, specifically mentioning fire protection and roads. . .@
DVCC Unit 5E Dec. Of Annex Doc. 396146; Doc 398502- Lot 152	Doc. No. 379116, recorded April 6, 2006	Dayton Valley Investors, LLC Summit Engineering	** See detailed information at end of sheet	St. Andrews Dr. (Private) Stonehaven Ct. (Private), Lots 137-171	AThe roads shown hereon are to remain private with an easement granted for access and utility use.@ AThe City, County, School District and Special Districts are not obligated to furnish any service, specifically mentioning fire protection and roads.

					. .@
DVCC Unit 6A Dec. Of Annex 272539	Doc. No. 260514, recorded May 3, 2001	Dayton Valley Investors, LLC Summit Engineering	** See detailed information at end of sheet	La Quinta Ct. (Private) Royal Troon Dr. (Private) Champions Dr. (Private) Torrey Pines Dr. (Private) Parcel A Common Area, Lots 101-144	AThe roads shown hereon are to remain private with an easement granted for access and utility use.@ AThe City, County, School District and Special Districts are Not obligated to furnish any service, specifically mentioning fire protection and roads. . .@
DVCC Unit 6B Dec. Of Annex Doc 285629	Doc. No. 282826, recorded Sept. 19, 2002	Dayton Valley Investors, LLC Summit Engineering	** See detailed information at end of sheet	Torrey Pines Dr. (Private) Royal Troon Dr. (Private) Lots 245-282, inclusive Streets defined as common area in Dec. Of Annex	AThe roads shown hereon are to remain private with an easement granted for access and utility use.@ AThe City, County, School District and Special Districts are Not obligated to furnish any service, specifically mentioning fire protection and roads. . .@
DVCC Unit 6C Dec. Of Annex Doc 305900	Doc. No. 302392, recorded Aug. 19, 2003	Lakemont Dayton Homes 7, LLC Summit Engineering	No such entity listed w NCSOS;	Royal Troon Dr. (Private) Dornoch Ct. (Private) Birkdale Ct. (Private) Defined as common area in Dec. Of Annex.	AThe roads shown hereon are to remain private with an easement granted for access and utility use.@ AThe City, County, School District and Special Districts are Not obligated to furnish any service, specifically mentioning fire protection and roads. . .@
DVCC Unit 7A Dec. Of Annex Doc 329530	Doc. No. 318691, recorded April 20, 2004	Dayton Valley Investors, LLC Summit Engineering	** See detailed information at end of sheet	Ballybunion Dr. (Private) Ballybunion Ct. (Private) Gullane Ct. (Private) Lots 1-30, inclusive Mis iden streets in DofA; intent to show as c.a.	AThe roads shown hereon are to remain private with an easement granted for access and utility use.@ AThe City, County, School District and Special Districts are Not obligated to furnish any service, specifically mentioning fire protection and roads. . .@

DVCC Unit 7B Dec of Annex Doc 336135	Doc. 332795, recorded October 7, 2004	Dayton Valley Investors, LLC Summit Engineering	** See detailed information at end of sheet	Grayhawk Dr. (Private) Grayhawk Ct. (Private) Lytham Ct. (Private) Lots 1-21 inclusive, Parcel A Common Area Parcel B Common Area	AThe roads shown hereon are to remain private with an easement granted for access and utility use.@ AThe City, County, School District and Special Districts are not obligated to furnish any service, specifically mentioning fire protection and roads.@
DVCC Unit 8A Dec. Of Annex 328586	Doc. No. 318690, recorded April 20, 2004	Dayton Valley Investors, LLC Summit Engineering	** See detailed information at end of sheet	Lakeview Dr. (Private) St. Andrews Dr. (Private) Parcel A, Lots 1-46 inclusive Streets identified as c.a. in Dec. Of Annex	AThe roads shown hereon are to remain private with an easement granted for access and utility use.@ AThe City, County, School District and Special Districts are Not obligated to furnish any service, specifically mentioning fire protection and roads. . .@
DVCC Unit 8C	Doc. No. 379117, recorded April 6, 2006	Dayton Valley Investors, LLC Summit Engineering	** See detailed information at end of sheet	Moore Ave (Private) Parcel A (future development) Lot 331-339 inclusive	AThe roads shown hereon are to remain private with an easement granted for access and utility use.@ AThe City, County, School District and Special Districts are not obligated to furnish any service, specifically mentioning fire protection and roads. . .@

Parcel Map Seems to encompass all land within DVCC development	Parcel Map for COMLAW No.445 Limited, a United Kingdom Corporation, Doc. No. 232542, recorded April 19, 1999	COMLAW No.445 Limited, a United Kingdom Corporation/ Thiel Engineering Consultants		**Bayhill Circle (Private), various Afuture roads@ and future street** **ARoadways as shown upon this map will not be eligible for county maintenance until the roadways are improved at no cost to the county, to public maintenance road standards approved by the county commissioners, and in affect at such time that the roadways are considered for acceptance into the county=s road system.@**	**The City, County, School District and Special Districts are not obligated to furnish any service, specifically mentioning fire protection and roads to the lands so divided, and that any public utility may similarly free of obligation.@**
Amendment to Parcel Map 232542	Certificate of Amendment recorded July 1, 1999 as Doc. 235947				We have saved copy of Certificate of Amendment in e-files for Dayton Valley.
Record of Survey in Support of Boundary Line Adj.	Doc. 305473 recorded Oct. 02, 2003	Dayton Valley Investors, LLC and DBBR, LLC	** See detailed information at end of sheet	Being a reconfig. Of Parcels within the NE 1/4 of Sec 24, and NE 2 of Sec. 19 and SW 1/4 of Sec. 18, T16N, R22E, MDM	
Subdivision Map for The Gallery-Phase 1	Doc. 318704 recorded 4.20.04 Being a subdivision of	DBBR, LLC	Dissolved Dave Bartosz 3 Canyon Dr.	Cruden Bay Dr. And Rivera Ct.	The roads shown hereon are to remain private with an easement granted for access and utility uses with the exception of Lakes Blvd

Dec. Of Annex Doc 305479	lands located within the NE 1/4 of Sec 24, T16N, R21E and NW 1/4 of Sec 19 and the SW 1/4 of Sec 18, T16N, R22E, MDM		CC, NV 89703; Barbara Rainey 1987 N. Carson St. #75 CC, NV 89701		which is offered for dedication.
Subdivision Map for The Gallery Phase 2 Dec. Of Annex Doc 305479	Doc. 379115, recorded 4.6.06 Being a subdivision of lands located within the NE 1/4 of Sec 24, T16N, R21E and NW 1/4 of Sec 19 T16N, R22E, MDM	DBBR, LLC		Cruden Bay and Wentworth Ct.	The roads shown hereon are to remain private with an easement granted for access and utility uses

Dec. Of Annex for The Gallery	Doc. 305479 recorded Oct. 2, 2003.	DBBR, LLC		Parcel 2A as shown upon Boundary Line Adjustment Map filed April 25, 1991 as Document 141060 excepting therefrom DVCC Units 2B and 2C; Parcel 2B as shown on BLAM filed April 25, 1991 as Document No 141060	

Info on Dayton Valley Investors, LLC
Registered Agent: Silverado Homes NV, Inc., 5525 Kietzke Ln., Ste. 102, Reno NV 89511; Person w authority to act: Thomas Evance

DAYTON VALLEY INVESTORS, LLC a Nevada limited liability company

By: Wade Dayton, LLC a Nevada limited liability company
Its Manager

By: _____
Joe Wade
Its Chief Executive Officer

By: _____
Patricia M. Snyder
Its President

By: Lakemont Dayton, LLC, a Nevada limited liability company
Its Manager

By: Lakemont Homes Nevada, Inc., a Nevada corporation
Its Managing Member

By: _____
Greg Peitzmeier
Its Nevada Division President

LAKEMONT DAYTON HOMES 7, LLC a Nevada limited liability company

By: Wade Dayton, LLC a Nevada limited liability company
Its Manager

By: _____
Joe Wade
Its Chief Executive Officer

By: _____
Patricia M. Snyder
Its President

By: Lakemont Dayton, LLC, a Nevada limited liability company
Its Manager

By: _____
Greg Peitzmeier
Its Nevada Division President

Point Legado Phase 1 Not a part of DVCA	Doc. No. 379118, recorded April 6, 2006	Dayton Valley Investors, LLC Summit Engineering		(Located on north side of Dayton Valley Road) Catlin Street (Private) McMarlin (Private) Blackburn Way (Private) Calver Street (Private) Bailey Street (Private) McLaughlin Lane (Private) Haskill Street (Private) Lamarri Lane (dedicated to Lyon County) Common Area Parcels through C through J	AThe roads shown hereon are to remain private with an easement granted for access and utility use.@ AThe City, County, School District and Special Districts are not obligated to furnish any service, specifically mentioning fire protection and roads. . .@ AA blanket private access easement is hereby granted over Parcel C, Parcel D, Parcel I and Parcel J shown hereon.@ APed. Access easement is granted over all private streets and Parcels C thru Parcel J shown hereon.@

STEVE SISOLAK
Governor

TERRY REYNOLDS
Director

SHARATH CHANDRA
Administrator

CHARVEZ FOGER
Ombudsman

STATE OF NEVADA
DEPARTMENT OF BUSINESS AND INDUSTRY
REAL ESTATE DIVISION
COMMON-INTEREST COMMUNITIES AND
CONDOMINIUM HOTELS PROGRAM
CICOmbudsman@red.nv.gov
http://www.red.nv.gov

August 27, 2021

Via Certified Mail Return Receipt Requested # 7018 1130 0001 6026 7669

Gale Kern, Esq.
5421 Kietzke Lane, Suite 200
Reno, NV, 89511

Re: Compliance Demand Letter - Dayton Valley Community Association

Cases #: 2021-696 and 2021-761

Dear Mr. Drury:

The State of Nevada Real Estate Division (the "Division"), Compliance Section for Common-Interest Communities and Condominium Hotels, has completed its investigation of the above-referenced case. The Division reviewed the information and has identified the following areas you need to be aware of and instructed upon.

It is alleged that you violated NRS 116.31034(10)(a)(2) as stakeholders with Tour Specks (Aka: Dayton Valley Golf Course) were allowed to run and gain positions on the Board.

NRS 116.31034(10)(a)(2) *Election of members of executive board and officers of association; term of office of member of executive board; staggered terms; eligibility to be candidate for or member of executive board or officer of association; required disclosures; procedure for conducting elections; certification by member of executive board of understanding of governing documents and provisions of chapter.*

10. Except as otherwise provided in subsections 11 and 12, unless a person is appointed by the declarant:

(a) A person may not be a candidate for or member of the executive board or an officer of the association if:

2) The person stands to gain any personal profit or compensation of any kind from a matter before the executive board of the association

The Division understands there is an annexation problem with the property located at and around the Palmer Gate exit. The Division understands the Association is working on solving the annexation issue. However, until this property is actually annexed to the Association, there is a conflict of interest with any individual being placed on the Ballot and/or elected to the Board who owns any portion of Tour Specks (Aka: Dayton Valley Golf Course) directly or indirectly through marriage.

Consequently, any stakeholder with Tour Specks (Aka: Dayton Valley Golf Course) must be removed from the board and not placed on a future election ballot pursuant to NRS 116.31034(13)(a)(b) until the property is properly annexed to the Association.

NRS 116.31034(13)(b) *Election of members of executive board and officers of association; term of office of member of executive board; staggered terms; eligibility to be candidate for or member of executive board or officer of association; required disclosures; procedure for conducting elections; certification by member of executive board of understanding of governing documents and provisions of chapter.*

13. If a person is not eligible to be a candidate for or member of the executive board or an officer of the association pursuant to any provision of this chapter, the association:

(a) Must not place his or her name on the ballot; and

(b) Must prohibit such a person from serving as a member of the executive board or an officer of the association.

This correspondence will serve as a Compliance Demand Letter such that if this conduct should occur in the future, the Division may initiate a complaint for disciplinary action before the Commission for Common-Interest Communities and Condominium Hotels.

Any stakeholder of Tour Specks (Aka: Dayton Valley Golf Course) currently on the board must resign. If a member refuses to resign the individuals must be removed by the Board no later than October1, 2021.

If members choose to resign, proof of resignation and a copy of the updated Registration Filing Addendum, Form 623, including newly appointed individuals, must be provided no later than October 1, 2021.

If a member refuses to resign and a meeting is held, provide the agenda, meeting minutes and include the appointment of new member to fill the remaining board positions as well as the updated Form 623, no later than October 1, 2021.

Send the requested documentation to my attention at the following address: 1818 W College Parkway, Suite 110, Carson City, NV 89706.

The decision to close this matter is made without prejudice. The Division reserves the right to reopen its investigation should such action be warranted.

Sincerely,

Christy Staffen

Christy Staffen
Compliance Audit Investigator II

cc.
Dennis Drury
662 St. Andrews Dr.
Dayton, NV 89403

Carla Cole
653 Saint Andrews Dr.
Dayton, NV 89403

Sandy Mass
285 La Costa Avenue
Dayton, NV 89403

Joan Latimer
104 Poppy Hills Court
Dayton, NV 89403

Steve Gallisdorfer
518 Stonehaven Court
Dayton, NV 89403

James Kepler
681 Saint Andrews Drive
Dayton, NV 89403

Gayle A. Kern, Esq. Reply to: Reno

August 20, 2021

Via email to csmstaffen@red.nv.gov and first class mail

Christy Staffen
State of Nevada Department of Business and Industry
Real Estate Division
Office of the Ombudsman
3300 West Sahara Avenue, Suite 325
Las Vegas, Nevada 89102

Re: *Dayton Valley Community Association*
File Number 2021-761

Dear Ms. Staffen:

As you know, this law firm represents Dayton Valley Community Association ("Association") and has been retained by the Board of Directors ("Board") to respond to your letter of August 9, 2021 to the Board President, Dennis Drury, regarding Case No. 2021-761 with the Nevada Real Estate Division ("Division"). Although I was not aware of a third complaint being filed, my previous comprehensive response regarding Case No. 2021-696 is nearly identical to this claim and is enclosed for your review. In addition, I reference the letter to you regarding Case No. 2021-696 as well. I have not provided the documents again as I understand they are in the Division's files. If you need me to send them again, please do not hesitate to contact me.

However, in the interest of expediting the closure of this matter, I repeat the Division's allegations in the August 9, 2021 letter and respond below. In addition, we are confused as to why the matter did not conclude after the correspondence with Ms. Michael. If you could explain why the Division is continuing the investigation, we would appreciate it. These investigations are very expensive and time-consuming for an Association and when there is no evidence to support the allegations by the owners, it would seem appropriate the Division would take no further action. If after review of the July 27, 2021 letter, there had been any concerns, we most certainly would like to address such concerns. However, as the allegations do not add any concerns, we are unsure if there is additional information you require.

Allegations and Response:

1. It is alleged that you "NRS 116.3103 Failure to exercise fiduciary responsibility and act in the best interest of the membership by not properly reviewing candidate disclosure statements. Allowing Board member to motion for vote on matter that board member was

directly the subject matter of review of their own omissions." It is alleged that your actions are a violation of NRS 116.3103 AND NRS 116.31034(9)(a) and (10).

2. It is alleged that you "NRS 116.31034(9)(a)(9) each person who is nominated as a candidate for membership on the executive board pursuant to subsection 4 must: (a) Make a good faith effort to disclose any financial, buisness, professional or personal relationship or interest that would result or would appear to a reasonable person to result in a potential conflict of interest that would result or would appear to a reasonable person to result in a potential conflict of interest for the candidate if the candidate were to be elected to serve as a member of the executive board." It is alleged that your actions are a violation of NRS 116.31034(9)(a).

3. It is alleged that you "NRS 116.31034(10)(a)(2)(10) Except as otherwise provided in Subsections 11 and 12, unless a person is appointed by the declarant (a) A person may not be a candidate for or member of the executive board or an officer of the association if: 2) The person stands to gain any personal profit or compensation of any kind from a matter before the executive board of the association." It is alleged that your actions are a violation of NRS 116.31034(10)(a)(2).

The alleged violations are of NRS 116.3103 and NRS 116.31034(9)(a) and (10). Also referenced are NRS 116.31034(9)(a)(9) and NRS 116.31034(10)(a)(2)(10), which do not exist. With respect to the existing provision, they are set forth below:

> **NRS 116.3103 Power of executive board to act on behalf of association; members and officers are fiduciaries; duty of care; application of business-judgment rule and conflict of interest rules; limitations on power.**
>
> 1. Except as otherwise provided in the declaration, the bylaws, this section or other provisions of this chapter, the executive board acts on behalf of the association. In the performance of their duties, the officers and members of the executive board are fiduciaries and shall act on an informed basis, in good faith and in the honest belief that their actions are in the best interest of the association. Officers and members of the executive board:
>
> (a) Are required to exercise the ordinary and reasonable care of officers and directors of a nonprofit corporation, subject to the business-judgment rule; and
>
> (b) Are subject to conflict of interest rules governing the officers and directors of a nonprofit corporation organized under the law of this State.
>
> 2. The executive board may not act to:
>
> (a) Amend the declaration.
>
> (b) Terminate the common-interest community.

(c) Elect members of the executive board, but notwithstanding any provision of the governing documents to the contrary, the executive board may fill vacancies in its membership for the unexpired portion of any term or until the next regularly scheduled election of executive board members, whichever is earlier. Any executive board member elected to a previously vacant position which was temporarily filled by board appointment may only be elected to fulfill the remainder of the unexpired portion of the term.

(d) Determine the qualifications, powers, duties or terms of office of members of the executive board.

3. The executive board shall adopt budgets as provided in NRS 116.31151.

NRS 116.31034 Election of members of executive board and officers of association; term of office of member of executive board; staggered terms; eligibility to be candidate for or member of executive board or officer of association; required disclosures; procedure for conducting elections; certification by member of executive board of understanding of governing documents and provisions of chapter.

. . .

9. Each person who is nominated as a candidate for membership on the executive board pursuant to subsection 4 must:

(a) Make a good faith effort to disclose any financial, business, professional or personal relationship or interest that would result or would appear to a reasonable person to result in a potential conflict of interest for the candidate if the candidate were to be elected to serve as a member of the executive board; and

. . .

10. Except as otherwise provided in subsections 11 and 12, unless a person is appointed by the declarant:

(a) A person may not be a candidate for or member of the executive board or an officer of the association if:

(1) The person resides in a unit with, is married to, is domestic partners with, or is related by blood, adoption or marriage within the third degree of consanguinity or affinity to another person who is also a member of the executive board or is an officer of the association;

(2) The person stands to gain any personal profit or compensation of any kind from a matter before the executive board of the association; or

(3) The person, the person's spouse or the person's parent or child, by blood, marriage or adoption, performs the duties of a community manager for that association.

> (b) A person may not be a candidate for or member of the executive board of a master association or an officer of that master association if the person, the person's spouse or the person's parent or child, by blood, marriage or adoption, performs the duties of a community manager for:
>
> (1) That master association; or
>
> (2) Any association that is subject to the governing documents of that master association.

Although not identified in the allegations above, the original communication from Mr. Hughes attacked Carla Cole, James Kepler, and Doug Kreie would stand to gain personal profit or compensation if they were to be elected to the Board. These allegations were false.

There is nothing to show that because Carla Cole is the president of the women's golf club that she has a conflict of interest or would receive a personal profit or compensation by the mere fact that she holds an officer position in a volunteer group of women who play golf. That type of logical leap is improper. The fact that people that live next door to a golf course happen to be golfers should not be surprising to anyone. Liking to play golf at an adjacent golf course is not a disqualification to serve on the Board of the Association. Ms. Cole was elected to the Board.

As to James Kepler, the fact that he is the owner of Tour Specs Golf, the owner of Dayton Valley Golf Course, is evidence of nothing. Disqualification cannot be had based on assumptions. Regardless, there is no substantiated basis to even make an assumption that just because Mr. Kepler is the owner of Tour Specs Golf that he somehow stands to personally benefit from being a member of the Board. There is no payment of any kind to the owner of the Golf Course and we have not found that there has ever been any payment of any kind to the owner of the Golf Course. There are no contracts that have been located that evidence payment or profit of any kind by the Association to the owner of the Golf Course. To the contrary, Mr. Kepler, who has been a homeowner for many years, has been subjected to vitriolic attacks by Joseph Hughes and others. Mr. Kepler was elected to the Board. If a matter becomes before the Board and that ownership poses a conflict, he would then need to recuse himself from that vote, but it doesn't preclude him from serving. Absent the identified grounds for prohibiting a member from being a candidate being present, an Association may not refuse to allow the person to be a candidate. Prior to the election, Mr. Hughes' then attorney (Mr. Loizzi has been suspended from the practice of law and is no longer Mr. Hughes's attorney) was asked to identify any matter that would result in personal profit to or compensation by Mr. Kepler. There has never been any contract or identification of any contractual relationship between Mr. Kepler and the Association that would preclude him from serving on the Association. there was no information regarding such a contractual relationship or contract and/or personal profit or compensation he would receive from a particular matter. There was no information that the Association makes monetary payments to Mr. Kepler and/or the golf course that would result in a personal profit or compensation to Mr. Kepler. Even the prior maintenance agreement was solely a benefit to the Association as the golf course did not care and still does not care if the particular area is landscaped in any way and, in any event, no funds were paid to the golf course.

Similarly, Doug Kreie's position as a stockholder in Tour Specs is *not* a basis for disqualification. His status as a stockholder does not create a personal profit or compensation. I would note that he

has been on the Board for some time and Mr. Hughes never identified any matter that he participated in that resulted in his receipt of any personal profit or compensation. Mr. Kreie was not elected to the Board.

The election packet was approved by a majority of the Board. The individual disclosure statements were included in the election packet and were viewed as part of the election packet. There was not separate action taken on the individual disclosure statements. The entire election packet was approved to be sent with certain edits to the information provided to the owners. The changes included: the word "Poll" would be changed to "Door"; the return address for the ballot was to be added to the cover letter; the word "Board" was added to organizational meeting; the Call to Order was changed to 6:00 p.m.; added additional time to accept ballots in person; and there was addition to the bottom of the agenda "The Board of Directors may take action on all items listed on the agenda". According to the draft minutes for June 9, 2021, the action taken was to approve the election packet with these editing changes. The motion made by Mr. Kreie and seconded by Paula Darragh and was, according to the draft minutes: "Doug Kreie made a motion to approve the proof from BallotBox with the above listed corrections." Neither Mr. Hughes, nor any other Board member made any motion to challenge the individual disclosure statements of any of the specific candidates so the allegation that there was a vote by a particular candidate about his or her particular disclosure is false. In addition, the discussion by Mr. Hughes and Ms. Puzzo to disqualify candidates and remove their names from the ballot did not result in any motion either.

Based on the facts and information presented, is our hope that you will close this matter. Mr. Hughes, a candidate in an election that included 16 candidates for 7 positions, had a personal interest in having fewer competitors. The challenges were without merit and, more importantly, did not involve any of the disqualifying matters identified in NRS 116.3034(10). The law recognizes that except in those limited circumstances, any unit owner may be a candidate for election to the Board of a common interest community. Disqualification is a serious and exceptional issue that should not be treated lightly. The unsupported allegations of some vague and unsubstantiated claim of personal profit or compensation when there is no evidence of any compensation of any kind by the Association in all the years of its existence should not form the basis of a disqualification.

We look forward to your continuing professional courtesies. If there is anything you would like to discuss, please do not hesitate to contact me.

Sincerely,

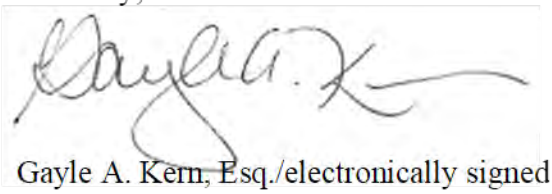

Gayle A. Kern, Esq./electronically signed

c: Client

OWNER'S CERTIFICATE:

THE UNDERSIGNED HEREBY CERTIFY THAT THEY ARE THE OWNERS OF THE TRACT OF LAND SHOWN HEREON AND HEREBY CONSENT TO THE PREPARATION AND RECORDATION OF THIS MAP AND DO HEREBY GRANT FOREVER THOSE PERMANENT EASEMENTS FOR ACCESS AND UTILITY INSTALLATION SHOWN HEREON.

COMLAW NO. 445 LIMITED, A UNITED KINGDOM CORPORATION
BY: James P. Shinhoster

NOTARY PUBLIC CERTIFICATE:

STATE OF Pennsylvania } S.S.
Lancaster COUNTY }

ON THIS 5th DAY OF April, 1999, A NOTARY PUBLIC IN Lancaster COUNTY, James P. Shinhoster WHO ACKNOWLEDGED TO ME THAT HE REPRESENTS COMLAW NO. 445 LIMITED A UNITED KINGDOM CORPORATION IS THE OWNER OF SAID PROPERTY AND THAT IT WAS EXECUTED FREELY AND VOLUNTARILY FOR THE PURPOSES AND USES MENTIONED HEREIN. IN WITNESS WHEREOF, I HEREUNTO SET MY HAND AND AFFIX MY OFFICIAL SEAL.

Hannah J. Tran
NOTARY PUBLIC
MY COMMISSION EXPIRES Feb 14, 2002

NOTARIAL SEAL
HANNAH J TRAN Notary Public
East Hempfield Township, Lancaster Co. PA
My Commission Expires Feb 14, 2002

NOTES:

1. THE CITY, COUNTY, SCHOOL DISTRICT AND SPECIAL DISTRICTS ARE NOT OBLIGATED TO FURNISH ANY SERVICE, SPECIFICALLY MENTIONING FIRE PROTECTION AND ROADS, TO THE LAND SO DIVIDED, AND THAT ANY PUBLIC UTILITY MAY BE SIMILARLY FREE OF OBLIGATION.
2. ACCEPTANCE BY LYON COUNTY OF THIS PARCEL MAP IS NOT A COMMITMENT THAT ANY OR ALL OF THE LOTS ARE ELIGIBLE FOR A COUNTY BUILDING PERMIT.
3. ROADWAYS DESIGNATED AS PUBLIC ROADS AS SHOWN UPON THIS MAP WILL NOT BE ELIGIBLE FOR COUNTY MAINTENANCE UNTIL THE ROADWAYS ARE IMPROVED (AT NO COST TO THE COUNTY) TO PUBLIC MAINTENANCE ROAD STANDARDS APPROVED BY THE COUNTY COMMISSIONERS AND IN AFFECT AT SUCH TIME THAT THE ROADWAYS ARE CONSIDERED FOR ACCEPTANCE INTO THE COUNTY'S ROAD SYSTEM.
4. PUBLIC UTILITY AND DRAINAGE EASEMENTS ARE 5 FEET ALONG INTERIOR OF ALL SIDE AND REAR LOT LINES AND 7.5 FEET ADJACENT TO STREETS UNLESS OTHERWISE SHOWN.
5. PUBLIC UTILITY EASEMENTS ARE HEREBY GRANTED WITHIN EACH PARCEL FOR THE EXCLUSIVE PURPOSE OF INSTALLING AND MAINTAINING UTILITY SERVICE FACILITIES TO EACH PARCEL AT LOCATIONS MUTUALLY AGREED UPON BY THE OWNER OF RECORD AT THE TIME OF INSTALLATION AND THE UTILITY COMPANY.

COUNTY ENGINEER'S CERTIFICATE

I, DANIEL K. O'BRIEN, LYON COUNTY ENGINEER, DO HEREBY CERTIFY THAT I HAVE EXAMINED THIS MAP OF A PORTION OF SECTION 17, TOWNSHIP 16 NORTH, RANGE 22 EAST, M.D.B. & M., AND I AM SATISFIED WITH THE MAP AS BEING TECHNICALLY CORRECT.

LYON COUNTY ENGINEER — 4-19-99 DATE

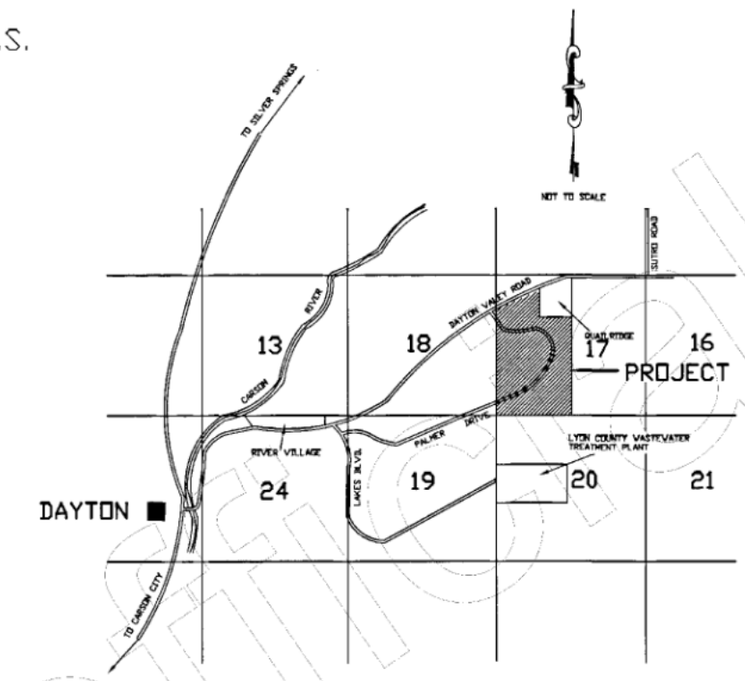

TOTAL AREA SURVEYED
244.35 ACRES

NOTICE TO SUBSEQUENT PURCHASERS

"RIGHT TO FARM" ORDINANCE NO. 439, BILL NO. 98-05, AS STATED IN LYON COUNTY CODE TITLE 10, CHAPTER 15, SUBSECTION 01.

SURVEYOR'S CERTIFICATE

I, DONALD A. DICK, A PROFESSIONAL LAND SURVEYOR LICENSED IN THE STATE OF NEVADA, CERTIFY THAT:

1. THIS PLAT REPRESENTS THE RESULT OF A SURVEY CONDUCTED UNDER MY DIRECT SUPERVISION AT THE INSTANCE OF COMLAW NO. 445 LIMITED, A UNITED KINGDOM CORPORATION.
2. THE LAND SURVEYED LIES WITHIN THE WEST HALF OF SECTION 17, T.16 N., R.22 E., M.D.B. & M., LYON COUNTY, AND THE SURVEY WAS COMPLETED ON FEBRUARY 10, 1999.
3. THIS PLAT COMPLIES WITH APPLICABLE STATUTES OF THIS STATE AND ANY LOCAL ORDINANCES IN EFFECT ON THE DATE THAT THE SURVEY WAS COMPLETED; AND THE SURVEY WAS CONDUCTED IN ACCORDANCE WITH CHAPTER 625 OF THE NEVADA ADMINISTRATIVE CODE.
4. THE MONUMENTS DEPICTED ON THE PLAT ARE OF THE CHARACTER SHOWN, OCCUPY THE POSITIONS INDICATED AND ARE OF SUFFICIENT DURABILITY.

Donald A. Dick
DONALD A. DICK — PLS 8659

PROFESSIONAL LAND SURVEYOR — DONALD A DICK — No. 8659

3/23/99
DATE

CLERK TREASURER'S CERTIFICATE

I, NIKKI BRYAN, LYON COUNTY CLERK/TREASURER, HEREBY CERTIFY THAT THERE ARE NO LIENS FOR UNPAID STATE, COUNTY, CITY OR LOCAL, TAXES OR SPECIAL ASSESSMENTS EXCEPT THOSE NOT DUE AND OWING ON PROPERTY THE SUBJECT OF THIS MAP.

Karen Russell, Deputy Clerk/Treas — April 19 1999
NIKKI BRYAN, LYON COUNTY CLERK/TREASURER — DATE

PLANNING COMMISSION APPROVAL

THIS PARCEL MAP WAS APPROVED AND ACCEPTED BY THE PLANNING COMMISSION OF LYON COUNTY, NEVADA.

Robert E. Fields THIS 13 DAY OF April, 1999.
CHAIRMAN

RECORDER'S CERTIFICATE

FILED FOR RECORD AT THE REQUEST OF COMLAW NO. 445 LIMITED, A UNITED KINGDOM CORPORATION, ON THIS 19 DAY OF APRIL 1999, AT 52 MINUTES PAST 8 O'CLOCK A M., IN THE OFFICIAL RECORDS OF LYON COUNTY, NEVADA.

FEE $17.00
FILE NO. 232541

Mary C. Milligan
COUNTY RECORDER
BY: Dawna L. Warr

SHEET 1 OF 2 SHEETS

PARCEL MAP
FOR
COMLAW NO. 445 LIMITED,
A UNITED KINGDOM CORPORATION
BEING A PORTION OF THE WEST HALF OF SECTION 17, TOWNSHIP 16 NORTH, RANGE 22 EAST, M.D.B. & M., ALSO BEING A DIVISION OF PARCEL 1 OF DOCUMENT #102038, COUNTY OF LYON, STATE OF NEVADA

THIEL ENGINEERING CONSULTANTS
T E C — CIVIL ENGINEERS, LAND SURVEYORS, WATER RIGHTS, LAND USE PLANNING
P.O. BOX 70458
RENO NEVADA 89570-0458
PHONE: (702) 352-7800
FAX: (702) 352-7929

C:\DWG\DVCCCDV

#232541 1of 2 4/19/99 #3531 1/2

UNOFFICIAL COPY

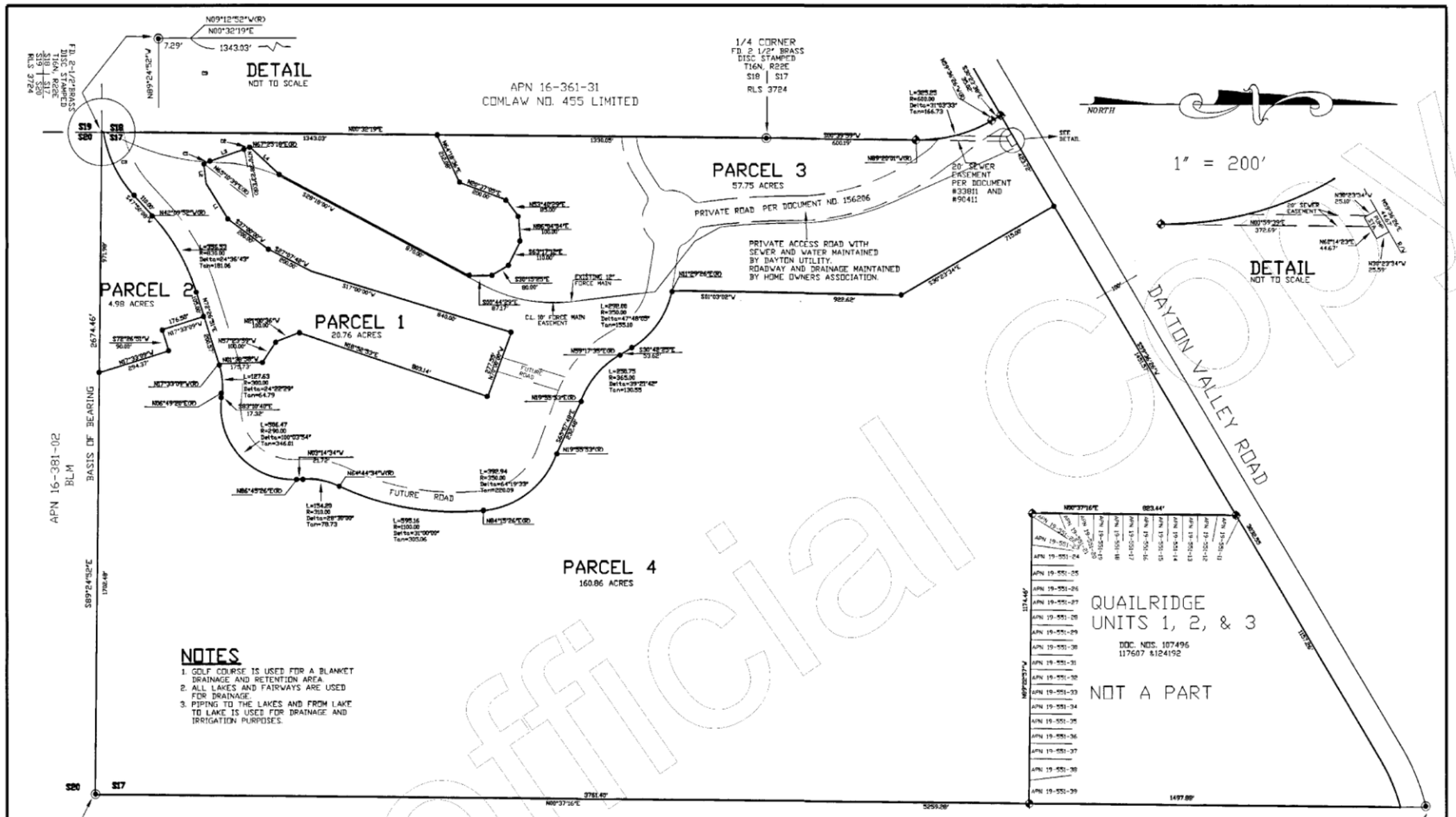

NOTES

1. GOLF COURSE IS USED FOR A BLANKET DRAINAGE AND RETENTION AREA.
2. ALL LAKES AND FAIRWAYS ARE USED FOR DRAINAGE.
3. PIPING TO THE LAKES AND FROM LAKE TO LAKE IS USED FOR DRAINAGE AND IRRIGATION PURPOSES.

BASIS OF BEARING

THE BEARING N 89°24'52" W BETWEEN THE SECTION CORNER COMMON TO 17, 18, 19, 20, AND THE 1/4 CORNER OF 17 AND 20, AS SHOWN ON DOCUMENT NO. 102038 WAS USED AS THE BASIS OF BEARINGS FOR THIS MAP.

LEGEND

- ● SET 5/8" REBAR & CAP, P.L.S. 8659
- ◆ FD. 5/8" REBAR & CAP, P.L.S. 3209
- ◉ FOUND AS NOTED
- (R) RADIAL

LINE TABLE		
LINE	LENGTH	BEARING
L1	170.00	S58°43'30"W
L2	80.00	N83°13'35"E
L3	147.89	S19°21'37"E
L4	162.16	S42°01'52"W

CURVE TABLE				
CURVE	DELTA	RADIUS	LENGTH	TANGENT
1	05°27'44"	270.00	25.74	12.88
2	03°13'05"	375.00	21.06	10.53
3	32°57'00"	500.00	287.54	147.87

SHEET 2 OF 2 SHEETS

PARCEL MAP

FOR
COMLAW NO. 455 LIMITED,
A UNITED KINGDOM CORPORATION
BEING A PORTION OF THE WEST HALF OF SECTION 17, TOWNSHIP 16 NORTH, RANGE 22 EAST, M.D.B. & M., ALSO BEING A DIVISION OF PARCEL 1 OF DOCUMENT #102038.
COUNTY OF LYON, STATE OF NEVADA

THIEL ENGINEERING CONSULTANTS
CIVIL ENGINEERS, LAND SURVEYORS, WATER RIGHTS, LAND USE PLANNING
P.O. BOX 70458
RENO NEVADA 89570-0458
PHONE: (702) 352-7800
FAX: (702) 352-7929

C:\DWG\GOLF\PMEAST

#232541 2of2 4/19/99

Unofficial Copy

Doc #: 626921

12/16/2020 04:46 PM Page: 1 of 6

OFFICIAL RECORD

Requested By: ETRCO

Lyon County, NV
Margie Kassebaum, Recorder

Fee: $40.00 RPTT: $4,543.50
Recorded By: blathrop

APN# : a) 016-351-35,57 &70
b) 016-362-16,& 17
c) 019-881-01
d) 019-873-19

RPTT: $4,543.50

Recording Requested By:
Western Title Company
Escrow No.: 120741-PAH

When Recorded Mail To:
Tour Specs Golf Management, LLC, a Nevada Limited Liability Company
681 St. Andrew Drive
Dayton, NV 89403

Mail Tax Statements to: (deeds only)
Same as Above

I the undersigned hereby affirm that the attached document, including any exhibits, hereby submitted for recording does not contain the social security number of any person or persons.
(Per NRS 239B.030)

Signature _____
Patti Hanson **Escrow Officer**

Grant, Bargain, and Sale Deed

This page added to provide additional information required by NRS 111.312
(additional recording fee applies)

Unofficial Copy

GRANT, BARGAIN AND SALE DEED

THIS INDENTURE WITNESSETH: That

FOR A VALUABLE CONSIDERATION, receipt of which is hereby acknowledged,

Dayton Valley Golf Course, LLC, a Nevada limited liability company

do(es) hereby GRANT(s) BARGAIN SELL and CONVEY to

Tour Specs Golf Management, LLC, a Nevada Limited Liability Company

and to the heirs and assigns of such Grantee forever, all the following real property situated in the City of LYON, County of Lyon State of Nevada bounded and described as follows:

See attached Exhibit A

TOGETHER with all tenements, hereditaments and appurtenances, if any, thereto belonging or appertaining, and any reversions, remainders, rents, issues or profits thereof.

Dated: 12/11/2020

Unofficial Copy

Grant, Bargain and Sale Deed – Page 3

Dayton Valley Golf Course , LLC, a Nevada Limited Liability Company

By
Thomas P. Duncan , Manager

STATE OF Nevada }
} ss
COUNTY OF Washoe

This instrument was acknowledged before me on

December 14, 2020.

By Thomas P. Duncan.

Notary Public

KRISTIN S. FRANCO
Notary Public - State of Nevada
Appointment Recorded in Washoe County
No: 04-89610-2 - Expires May 24, 2024

Unofficial Copy

EXHIBIT "A"

All that certain real property situate in the County of Lyon, State of Nevada, described as follows:

PARCEL 1:

A portion of Sections 18 and 19, Township 16 North, Range 22 East, M.D.B.&M., described as follows:

PARCEL 3 REMAINDER, as shown on that certain PARCEL MAP FOR COMLAW NO. 445 LIMITED, recorded April 19, 1999 as Document No. 232542, in the office of the Lyon County Recorder.

(APN 016-361-35, 016-362-16 and 016-362-17)

PARCEL 2:

A parcel of land situate in Section 17, Township 16 North, Range 22 East, M.D.B.&M., Dayton, Lyon County, Nevada, and more particularly described as follows:

BEGINNING at the Southwest corner of said Section 17; thence North 00°32'19" East a distance of 25.56 feet; thence North 74°32'29" East a distance of 277.14 feet; thence along a tangent circular curve to the left with a radius of 626.18 feet and a central angle of 16°16'56" an arc length of 177.94 feet; thence North 58°15'33" East a distance of 476.98 feet; thence South 17°33'09" East a distance of 452.35 feet; thence North 89°24'52" West a distance of 971.98 feet to the point of beginning.

NOTE: The above metes and bounds description appeared previously in that certain Deed recorded in the office of the County Recorder of Lyon County, Nevada on March 14, 2006, as Document No. 377318 of Official Records.

(APN 016-361-57)

PARCEL 3:

All that certain real property situate in Section Seventeen (17), Township Sixteen North (T16N.), Range Twenty-Two East (R22E.), M.D.M, lying within the Town of Dayton, Lyon County, Nevada, more particularly described as follows:

BEGINNING at a point on the southerly right-of-way line of Dayton Valley Road. Said point being further described as the northwest corner of Adjusted Parcel 1 of Record of Survey Map No. 387107, recorded July 25, 2006; THENCE departing said southerly line, S 30°24'45" E, 715.31 feet; THENCE S 01 °01'51" W, 922.62 feet to a point on the northerly line of Palmer Drive, a 100' Access & Public Utility Easement recorded as Document No. 255298; THENCE along the arc of a non-tangent curve to the right, radial to a bearing of S 11°28'17" W, having a radius of 349.99 feet, through a central angle of 47°48'07", a distance of 292.00 feet; THENCE S 30°43'36" E, 53.62 feet; THENCE along the arc of a tangent curve to the left, having a radius of 365.00 feet, through a central angle of 39°21'42", a distance of 250.75 feet; THENCE S 65°13'15" E, 232.51 feet; THENCE along the arc of a non-tangent curve to the right, radial to a bearing of S 19°55'21" W, having a radius of 350.00 feet, through a central angle of 23°59'40", a distance of 146.57 feet; THENCE S 03°39'11" W, 69.80 feet; THENCE S 16°44'55" E, 69.43 feet; THENCE S 14°43'33" E, 73.01 feet; THENCE S 08°21'38" E, 73.00 feet; THENCE S 06°04'33" E, 73.01 feet; THENCE S 00°16'20" W, 72.99 feet; THENCE S 04°38'52" W, 72.99 feet; THENCE S 03°23'08" W, 80.38 feet; THENCE S 01 °56'50" W, 80.50 feet; THENCE S 02°44'02" E, 80.48 feet; THENCE S 04°15'15" E,

Unofficial Copy

80.46 feet; THENCE S 04°41'13" E, 244.50 feet; THENCE S 69°27'32" W, 181.98 feet; THENCE S 75°54'55" W, 47.72 feet; THENCE S 86°42'39" W, 50.90 feet; THENCE N 83°40'46" W, 110.08 feet; THENCE N 80°37'25" W, 168.19 feet; THENCE S 75°00'50" W, 20.62 feet; THENCE N 57°24'31" W, 100.00 feet; THENCE N 21 °01'08" W, 100.00 feet; THENCE N 18°52'21" E, 803.14 feet; THENCE N 70°00'32" W, 277.55 feet; THENCE S 16°59'28" W, 840.00 feet; THENCE S 27°07'10" W, 200.00 feet; THENCE S 36°59'28" W, 200.00 feet; THENCE S 58°42'58" W, 170.00 feet; THENCE S 83°13'02" W, 80.00 feet; THENCE S 55°19'43" W, 4.40 feet; THENCE along the arc of a non-tangent curve to the left, radial to a bearing of S 65°00'44" W, having a radius of 455.67 feet, through a central angle of 15°06'25", a distance of 120.15 feet; THENCE N 28°17'28" E, 1175.39 feet; THENCE N 43°09'47" W, 85.02 feet; THENCE N 30°15'57" W, 35.12 feet; THENCE N 63°17'44" W, 110.00 feet; THENCE S 86°03'32" W, 100.00 feet; THENCE S 53°39'57" W, 85.00 feet; THENCE S 20°36'33" W, 200.00 feet; THENCE S 64°18'04" W, 212.08 feet to a point on the westerly line of Section 17; THENCE along said westerly line, N 00°31'47" E, 1330.05 feet to the west 1/4 corner of said Section 17; THENCE continuing along said westerly line, N 00°39'27" E, 600.19 feet; THENCE departing said westerly line along the arc of a tangent curve to the left, having a radius of 600.00 feet, through a central angle of 31°03'33", a distance of 325.25 feet; THENCE N 30°24'06" W, 35.13 feet to a point on the southerly right-of-way line of Dayton Valley Road; THENCE N 59°35'11" E, 423.05 feet to the POINT OF BEGINNING.

NOTE: The above metes and bounds description appeared previously in that certain Boundary Line Adjustment Deed recorded in the office of the County Recorder of Lyon County, Nevada on June 10, 2016 as Document No. 551568 of Official Records.

(APN 016-361-70)

PARCEL 4:

Parcel A as shown on the Official Map for DAYTON VALLEY COUNTRY CLUB UNIT 6A, recorded in the office of the Lyon County Recorder on May 3, 2001 as Document No. 260514.

(APN 019-881-01)

PARCEL 5:

Parcel A as shown on the map of DAYTON VALLEY COUNTRY CLUB UNIT 5B, filed in the office of the Lyon County Recorder on July 18, 2002, File No. 279806.

(APN 019-873-19)

PARCEL 6:

An Access and Utility Easement as set forth in document recorded May 4, 2010 as Document No. 458581 and in that certain REINSTATEMENT OF ACCESS AND UTILITY EASEMENT (Driving Range to Golf Maintenance Facility) recorded January 14, 2015 as Document No. 530900, Lyon County Official Records.

PARCEL 7:

An Office Well Access and Use Easement as set forth in document recorded May 4, 2010 as Document No. 458579 and in that certain REINSTATEMENT OF OFFICE WELL ACCESS AND USE EASEMENT recorded January 14, 2015 as Document No. 530901, Lyon County Official Records.

PARCEL 8:

An Access and Utility Easement as set forth in document recorded May 4, 2010 as Document

Unofficial Copy

No. 458581 and in that certain REINSTATEMENT OF ACCESS AND UTILITY EASEMENT (Driving Range to Golf Maintenance Facility) recorded January 14, 2015 as Document No. 530900, Lyon County Official Records.

PARCEL 9:

An Access and Utility Easement as set forth in that certain GRANT OF ACCESS AND UTILITY EASEMENT recorded November 5, 2014 as Document No. 527719, Lyon County Official Records.

Assessor's Parcel Number(s):

Unofficial Copy

Parcel 019-634-01

Tax Collection for this Parcel · Print this page

Return to Search · Previous Parcel | Next Parc

Owners

DAYTON VALLEY COMMUNITY ASSOC
3246 N CARSON ST STE 100
CRSON CITY, NV 89706-0000

Parcel Summary

Location	0 DAYTON VALLEY, NV
Use Code	110: Vacant - Splinter and Other Unbuildable
Tax District	8.8: Central Lyon Fire District
Subdivision	DAYTON VALLEY C C UNIT 4
Plat Maps	019-63.pdf (462kb)



156206	1992-11-05	SUBDIVISION MAP	Vacant	$0	

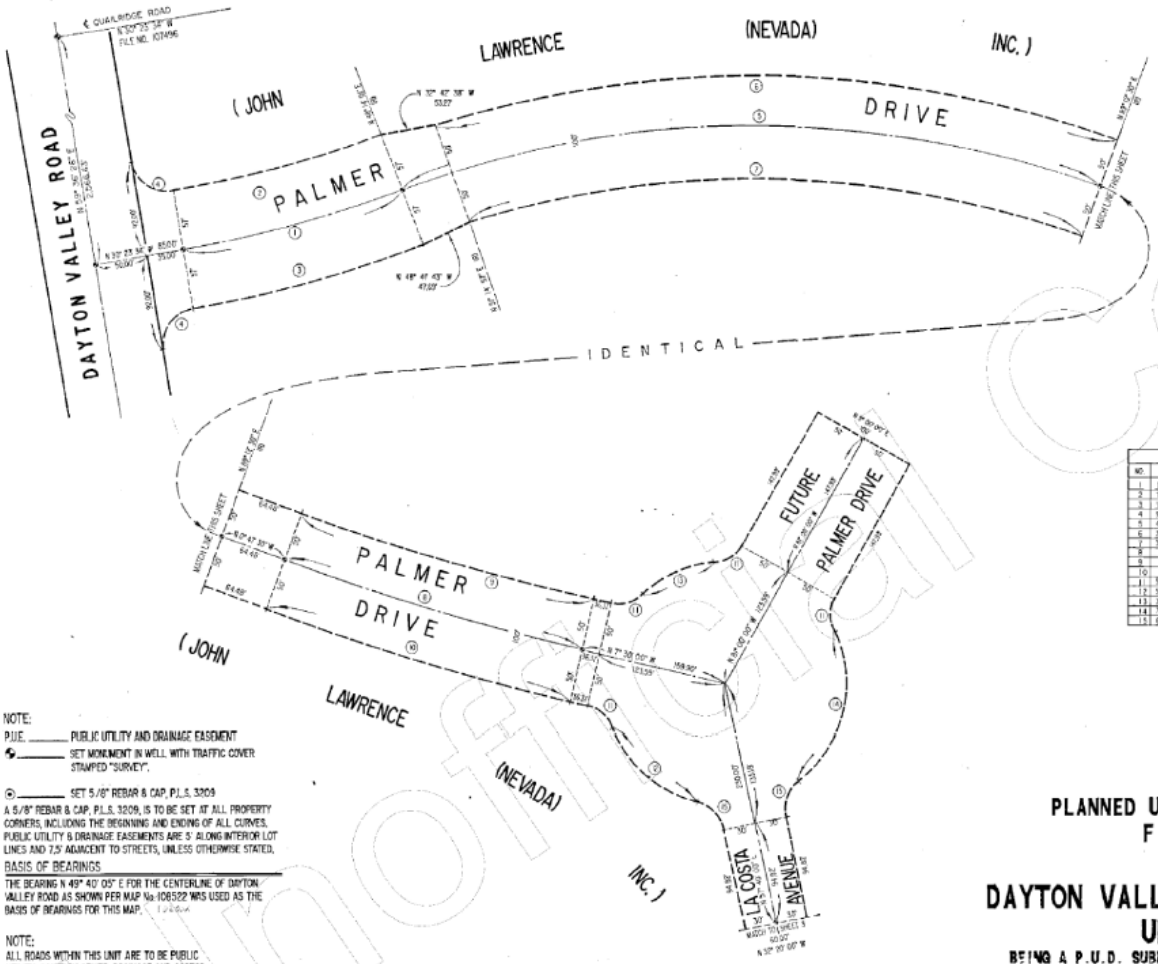

CURVE DATA					
NO.	Δ	R	L	T	D
1	11° 22' 25"	1100.00'	218.36'	109.54'	218.00'
2	11° 22' 25"	1043.00'	207.06'	103.86'	206.70'
3	11° 22' 25"	1157.00'	229.67'	115.21'	229.28'
4	90° 00' 00"	35.00'	54.98'	35.00'	49.50'
5	40° 58' 29"	350.00'	624.33'	354.98'	605.08'
6	37° 57' 33"	1000.00'	662.51'	343.93'	650.41'
7	31° 57' 33"	930.00'	596.76'	309.54'	585.42'
8	5° 45' 00"	2750.00'	276.04'	137.72'	274.99'
9	6° 45' 00"	2300.00'	509.09'	254.80'	508.14'
10	6° 42' 32"	2400.00'	281.00'	140.66'	280.84'
11	155° 28' 05"	-	35.00'	33.78'	18.31'
12	54° 58' 10"	-	115.00'	109.66'	59.40'	105.53'
13	37° 27' 50"	115.00'	75.19'	39.00'	73.84'
14	78° 28' 00"	15.00'	137.50'	93.81'	125.41'
15	64° 19' 15"	35.00'	39.29'	22.21'	37.24'

NOTE:
P.U.E. _____ PUBLIC UTILITY AND DRAINAGE EASEMENT

_____ SET MONUMENT IN WELL WITH TRAFFIC COVER STAMPED "SURVEY".

_____ SET 5/8" REBAR & CAP, P.L.S. 3209

A 5/8" REBAR & CAP, P.L.S. 3209, IS TO BE SET AT ALL PROPERTY CORNERS, INCLUDING THE BEGINNING AND ENDING OF ALL CURVES. PUBLIC UTILITY & DRAINAGE EASEMENTS ARE 5' ALONG INTERIOR LOT LINES AND 7.5' ADJACENT TO STREETS, UNLESS OTHERWISE STATED.

BASIS OF BEARINGS

THE BEARING N 49° 40' 05" E FOR THE CENTERLINE OF DAYTON VALLEY ROAD AS SHOWN PER MAP No. 108522 WAS USED AS THE BASIS OF BEARINGS FOR THIS MAP.

NOTE:
ALL ROADS WITHIN THIS UNIT ARE TO BE PUBLIC UTILITY, SANITARY SEWER, DRAINAGE AND ACCESS EASEMENTS PER NRS 278-A.

THIEL, WINCHELL & ASSOCIATES, INC.
34 LAKES BOULEVARD
DAYTON, NEVADA 89403

PLANNED UNIT DEVELOPMENT
FINAL MAP
FOR
DAYTON VALLEY COUNTRY CLUB
UNIT 4

BEING A P.U.D. SUBDIVISION OF A PORTION OF THE WEST 1/2 OF SECTION 17, ALSO THE SOUTHEAST 1/4 OF SECTION 18, TOWNSHIP 16 NORTH, RANGE 22 EAST, M.D.B. & M.

LYON COUNTY NEVADA

Unofficial Copy

STEVE SISOLAK
Governor

STATE OF NEVADA
DEPARTMENT OF BUSINESS AND INDUSTRY
REAL ESTATE DIVISION
COMMON-INTEREST COMMUNITIES AND
CONDOMINIUM HOTELS PROGRAM
CICOmbudsman@red.nv.gov
http://www.red.nv.gov

TERRY REYNOLDS
Director

SHARATH CHANDRA
Administrator

CHARVEZ FOGER
Ombudsman

August 9, 2021

Dayton Valley Community Association
Dennis Drury
C/O CAMCO
Attn: Julie Thompson
Po Box 400518
Las Vegas, Nv 89140

Via U.S. Certified Return Receipt Mail # 7018 1130 0001 6026 8482

Case No: 2021-761

Dear Mr. Drury:

The State of Nevada Real Estate Division (the "Division"), Compliance Section for Common-Interest Communities and Condominium Hotels, has received a complaint against the executive board of the **Dayton Valley Community Association**, and the Division has opened an investigation to determine if there has been a violation of Nevada Revised Statutes (NRS) 116 or Nevada Administrative Code (NAC) 116. The actual complaint is confidential in accordance with NRS 116.757.

Please provide a written response to the following allegations:

Allegation 1: It is alleged that you *"NRS 116.3103 Failure to exercise fiduciary responsibility and act in the best interest of the membership by not properly reviewing candidate disclosure statements. Allowing Board member to motion for vote and vote on matter that board member was directly the subject matter of review of their own omissions.*

It is alleged that your actions are a violation of **NRS 116.3103 and NRS 116.31034(9)(a) and (10)**.

Allegation 2: It is alleged that you *"NRS 116.31034(9)(a)(9) each person who is nominated as a candidate for membership on the executive board pursuant to subsection 4 must: (a) Make a good*

faith effort to disclose any financial, business, professional or personal relationship or interest that would result or would appear to a reasonable person to result in a potential conflict of interest for the candidate if the candidate were to be elected to serve as a member of the executive board.

It is alleged that your actions are a violation of **NRS 116.31034(9)(a)**.

Allegation 3: It is alleged that you *"NRS 116.31034(10)(a)(2)(10) Except as otherwise provided in subsections 11 and 12, unless a person is appointed by the declarant (a) A person may not be a candidate for or member of the executive board or an officer of the association if: 2) The person stands to gain any personal profit or compensation of any kind from a matter before the executive board of the association."*

It is alleged that your actions are a violation of **NRS 116. 31034(10)(a)(2)**.

Please provide a written response to these allegations, along with evidence and/or information and/or witness contact information (If any), to corroborate your response to the allegations.

Please provide all documents or other evidence to support your written response.

Your written response and the requested documentation must be submitted to the Division to the undersigned's attention no later than **10 business days from the date of this letter.**

Please be advised that pursuant to NAC 116.405(5), the Commission may find that a member of the executive board violated his or her duties pursuant to NRS 116.3103 by impeding or otherwise interfering with an investigation by the Division. NAC 116.405(5) states in part:

In determining whether a member of the executive board has performed his or her duties pursuant to NRS 116.3103, the Commission may consider whether the member of the executive board has:

5. Impeded or otherwise interfered with an investigation of the Division by:

(a) Failing to comply with a request by the Division to provide information or documents;

(b) Supplying false or misleading information to an investigator, auditor or any other officer or agent of the Division; or

(c) Concealing any facts or documents relating to the business of the association.

Upon review of the requested documents, the undersigned may be contacting you for further information and/or an interview.

Thank you in advance for your anticipated cooperation. Should you have any questions, you may contact me at 702-486-4480, or you may e-mail me at cmstaffen@red.nv.gov.

Sincerely,

Christy Staffen

_____
Compliance Audit Investigator II

Cc:

Sandy Mass
285 La Costa Ave
Dayton, Nv 89403

Paula Darragh
211 Portruch Ct.
Dayton, Nv 89403

Doug Kreie
144 Sawgrass Ln.
Dayton, Nv 89403

Amy Puzzo
908 Lakeview Dr.
Dayton, Nv 89403

Joseph Hughes
905 Lakeview Dr.
Dayton Valley, Nv 89403

STEVE SISOLAK
Governor

TERRY REYNOLDS
Director

SHARATH CHANDRA
Administrator

CHARVEZ FOGER
Ombudsman

STATE OF NEVADA
DEPARTMENT OF BUSINESS AND INDUSTRY
REAL ESTATE DIVISION
COMMON-INTEREST COMMUNITIES AND
CONDOMINIUM HOTELS PROGRAM
CICOmbudsman@red.nv.gov
http://www.red.nv.gov

August 4, 2021

Joseph Hughes
C/O HOA Lawyers Group
Attn: Kerry Faughnan Esq
9500 W. Flamingo Rd., Ste. 204
Las Vegas, Nv 89147

Via U.S. Certified Return Receipt Mail# 7018 1130 0001 6026 8420

Re: Joseph Hughes Vs. Dayton Valley Community Association Case No. 2021-761

Dear Mr. Hughes:

The State of Nevada Real Estate Division (the "Division"), Compliance Section for Common-Interest Communities and Condominium Hotels, has received your complaint against the **Dayton Valley Community Association**, and the Division has opened an investigation to determine if there has been a violation of Nevada Revised Statutes (NRS) 116 or Nevada Administrative Code (NAC) 116. The actual complaint is confidential in accordance with NRS 116.757.

Please provide a written explanation to the following allegations:

Allegation #1: You alleged in your first allegation *"NRS 116.3103 Failure to exercise fiduciary responsibility and act in the best interest of the membership by not properly reviewing candidate disclosure statements. Allowing Board member to motion for vote and vote on matter that board member was directly the subject matter of review of their own ommissions* [SIC]*."*

You alleged in your first allegation that the Respondent's actions are a violation of **NRS 116.3103 and NRS 116.31034(9)(a) and (10)**.

Please provide a written explanation to this allegation, along with evidence and/or information and/or witness contact information (If any), to corroborate your allegation.

Allegation #2: You alleged in your second allegation *"NRS 116.31034(9)(a)(9) each person who is nominated as a candidate for membership on the executive board pursuant to subsection 4 must: (a) Make a good faith effort to disclose any financial, business, professional or personal relationship or interest that would result or would appear to a reasonable person to result in a potential conflict of interest for the candidate if the candidate were to be elected to serve as a member of the executive board.*

You alleged in your second allegation that the Respondent's actions are a violation of **NRS 116.31034(9)(a)**.

Please provide a written explanation to this allegation, along with evidence and/or information and/or witness contact information (If any), to corroborate your allegation.

Allegation #3: You alleged in your third allegation *"NRS 116.31034(10)(a)(2)(10) Except as otherwise provided in subsections 11 and 12, unless a person is appointed by the declarant (a) A person may not be a candidate for or member of the executive board or an officer of the association if: 2) The person stands to gain any personal profit or compensation of any kind from a matter before the executive board of the association."*

You alleged in your third allegation that the Respondent's actions are a violation of **NRS 11634(10) (a)(2) [SIC]; should be, NRS 116. 31034(10)(a)(2)**.

Please provide a written explanation to this allegation, along with evidence and/or information and/or witness contact information (If any), to corroborate your allegation.

In addition to providing an explanation to the above allegations, please provide all documents or other evidence to support your written response to include the following:

1. E-Mail communication you may have received from the Respondent regarding your allegations.

2. Physical letters and/or documents you may have received regarding your allegations.

3. Witness contact information (If any), of witnesses that may be able to corroborate your explanation to your allegations listed above. Include the witness' name, phone number, e-mail address, and mailing address.

4. Provide an answer as to if the Respondent has resolved your complaint as of the date of this letter.

Your written explanation and the requested documentation must be submitted to the Division to the undersigned's attention no later than **10 business days** from the date of this letter.

Upon review of the requested documents, I may contact you for further information and/or an interview.

Please reference the above case number in all future correspondence.

Please be advised that in accordance with NRS 116.760 "The Commission or a hearing panel may impose an administrative fine of not more than $1,000 against any person who knowingly files a false or fraudulent affidavit with the Division."

If you have any questions regarding this complaint, you may contact me in my office at 702-486-4480, or you may e-mail me at cmstaffen@red.nv.gov.

Sincerely,

Christy Staffen

Christy Staffen
Compliance Audit Investigator II

Attachments: Copy of the Intervention Affidavit

Case 2021-761

Allegation #2

Exhibit #1

DAYTON VALLEY COMMNITY ASSOCIATION

Exhibit #1
Pg 1

Candidacy Disclosure Statement

This form is provided for Homeowners who wish to run for the Board of Directors (you may nominate yourself). You must return this form to us no later than **March 24, 2021 by 5:00 PM.** The official meeting notice advising the exact date, time and location of the Election meeting will be mailed to all homeowners eligible to vote at a later date. There are seven (7) seats on the Board to fill.

NAME OF NOMINEE: Carla Cole

ARE YOU A HOMEOWNER IN THE ASSOCIATION STATED ABOVE? _____ _____

YES **NO**

Per NRS 116.31034 (5) (a) and (b), please complete the following information regarding your candidacy. Please print your responses.

1.) Each person whose name is placed on the ballot as a candidate for a member of the executive Board must:

(a) Make a good faith effort to disclose any financial, business, professional or personal relationship or interest that would result or would appear to a reasonable person to result in a potential conflict of interest for the candidate if the candidate were to be elected to serve as a member of the executive board; and (Please respond to the statutory requirements cited above).

None

(b) disclose whether or not the candidate is a member in good standing for the purpose of this paragraph, a candidate shall not be deemed to be in "good standing" if the candidate has any unpaid or past due assessments or construction penalties that are required to be paid to the association. Please answer the question below by placing an X in the correct answer.

I am a member in "Good Standing" with the Association: Yes ✓ **No** ___

2.) Experience: What skills do you feel you have that will contribute to the Board and Association? (Optional):

ATHLETIC BUSINESS MGR - DIVISION I University.
5 time member San Joaquin Co Civil Grand Jury, Foreperson and Vice Juror
Retired Law enforcement.
Women's Golf Club PRESIDENT

3.) Why do you want to serve on the Board? (Optional):

A better understanding of the HOA

I reside in a unit with, am married to, domestic partners with, or am related by blood, adoption or marriage within the third degree of consanguinity or affinity to another person who is also a member of the executive board or is an officer of the association. ____ yes ____ no If yes, please explain on a separate sheet of paper).

Note: **Nothing cited in this disclosure is intended to prevent a potential candidate from running for the board of directors. Further, the Board will not prohibit a candidate from appearing on the ballot for failure to provide a disclosure statement, or for providing an inaccurate one or one with content that is defamatory, libelous or profane. Should a candidate not complete a disclosure statement, or should it contain content believed to be defamatory, libelous or profane, the board will note the fact in a statement to be included with election-related mailings. Further, a complaint may be filed with the Real Estate Division against the candidate who does not comply with the disclosure requirement.**

Nominee Signature (Required): Carla M Cole

By signing this form I acknowledge that NRS 116.31034 requires a candidate to make all disclosures required by NRS 116.31034 in writing to the Association with his/her candidacy information, and that the disclosures must be distributed by the Association to each Member of the Association, with the ballot, in the manner established in the Bylaws of the Association, for that candidate to be eligible for office. By signing this form I agree to allow the Association to release any of the information I have supplied on this form.

CANDIDACY DISCLOSURE STATEMENT

(Please Print or Type)

Exhibit #1
Pg 2

Name Carla M Cole

Address 653 St. Andrews Dr. (Street) Dayton (City) NV (State) 89403 (Zip)

Are you a unit owner? ..... ☒ Yes ☐ No

(NOTE: NRS 116.31034(1) states: Except as otherwise provided in subsection 5 of NRS 116.212, not later than the termination of any period of declarant's control, the units' owners shall elect an executive board of at least three members, all of whom must be units' owners.)

NRS 116.31034 (9) (a) & (b) and NRS 116.31034 (10) (a) & (b) states the following:

9. Each person who is nominated as a candidate for membership on the executive board pursuant to subsection 4 must:
   (a) Make a good faith effort to disclose any financial, business, professional or personal relationship or interest that would result or would appear to a reasonable person to result in a potential conflict of interest for the candidate if the candidate were to be elected to serve as a member of the executive board; and
   (b) Disclose whether the candidate is a member in good standing. For the purposes of this paragraph, a candidate shall not be deemed to be in "good standing" if the candidate has any unpaid and past due assessments or construction penalties that are required to be paid to the association.
10. Except as otherwise provided in subsections 11 and 12, unless a person is appointed by the declarant:
   (a) A person may not be a candidate for or member of the executive board or an officer of the association if:
      (1) The person resides in a unit with, is married to, is domestic partners with, or is related by blood, adoption or marriage within the third degree of consanguinity or affinity to another person who is also a member of the executive board or is an officer of the association;
      (2) The person stands to gain any personal profit or compensation of any kind from a matter before the executive board of the association; or
      (3) The person, the person's spouse or the person's parent or child, by blood, marriage or adoption, performs the duties of a community manager for that association.

   (b) A person may not be a candidate for or member of the executive board of a master association or an officer of that master association if the person, the person's spouse or the person's parent or child, by blood, marriage or adoption, performs the duties of a community manager for:
      (1) That master association; or
      (2) Any association that is subject to the governing documents of that master association.

Please use the following lines to respond to the statutory requirements pursuant to NRS 116.31034 (9) (a)

Attach additional sheets, if necessary: _____

I am a candidate in good standing pursuant to NRS 116.31034(9) (b): ..... ☒ Yes ☐ No

If no, please explain: _____

Please indicate all that apply to your relation to any board members, officer(s) of the association or community managers:

I am:

- ☐ Residing within the same unit as a board member or officer.
- ☐ Married to a board member or officer.
- ☐ Domestic partners with a board member or officer.
- ☒ **None of the above**

Related to a board member by:

- ☐ Blood
- ☐ Adoption
- ☐ Marriage within the third degree of consanguinity
- ☐ Affinity to another person
- ☒ **None of the above**

The candidate must make all disclosures required pursuant to this subsection in writing to the association with his or her candidacy information. Except as otherwise provided in this subsection, the association shall distribute the disclosures, on behalf of the candidate, to each member of the association with the ballot or, in the event ballots are not prepared and mailed pursuant to subsection 5, in the next regular mailing of the association. The association is not obligated to distribute any disclosure pursuant to this subsection if the disclosure contains information that is believed to be defamatory, libelous or profane.

Any additional information provided by the candidate for the executive board is voluntary and is not a requirement under NRS 116.31034.

Carla M Cole
Signature of candidate

5/27/2021
Date

Revised 7/18/19

CICC0169

Exhibit #2
Pg 3

March 19, 2021

Dayton Home Owners Association Membership:

My name is Carla Cole and I am running for a director's position within the Dayton Valley Community Association. My husband and I moved to Dayton, Nevada in November of 2017 from Lodi, California.

I am very much interested in our HOA management and goals and I believe my experiences will be beneficial. I have continually strived to exceed the standards of the positions I have held.

- Currently, I am retired and the President of Dayton Valley Women's Golf Club.
- 1991-2007- Lodi Police Department, Lodi, Calf. Dispatcher/Jailer, Field Evidence Tech, Crime Preventions Officer, and member of the Critical Incident Negotiation Team.
- 1977-1991- Athletic Business Manager, University of the Pacific in Stockton, Calif. I managed the UOP Athletic Department's Business Operations, including the Athletic Ticket Office, and game-day operations of all major athletic events from 1985-1991.

After retirement, I was honored to be nominated to serve on the San Joaquin County Civil Grand Jury where I served for 5 years. During my tenure, I was chosen to the position of Grand Jury Foreperson and Vice Foreperson by the Presiding Judge of the San Joaquin County Superior Court. I have realized that I enjoyed making a difference in my community as I will for my HOA. I am honest, I know the meaning of confidentiality, and I am not afraid to ask difficult questions. I am a person that can work with others that may not be in agreement and defend my position.

Thank you

Carla Cole

St. Andrews Drive

Case 2021-761

Allegation #2

Exhibit #2

DAYTON VALLEY COMMNITY ASSOCIATION

Exhibit #2
Pg 1

Candidacy Disclosure Statement

This form is provided for Homeowners who wish to run for the Board of Directors (you may nominate yourself). You must return this form to us no later than **March 24, 2021 by 5:00 PM.** The official meeting notice advising the exact date, time and location of the Election meeting will be mailed to all homeowners eligible to vote at a later date. There are seven (7) seats on the Board to fill.

NAME OF NOMINEE: ___Jin Kepler_____

ARE YOU A HOMEOWNER IN THE ASSOCIATION STATED ABOVE? ____Yes_____ _____ **YES NO**

Per NRS 116.31034 (5) (a) and (b), please complete the following information regarding your candidacy. Please print your responses.

1.) Each person whose name is placed on the ballot as a candidate for a member of the executive Board must:

(a) Make a good faith effort to disclose any financial, business, professional or personal relationship or interest that would result or would appear to a reasonable person to result in a potential conflict of interest for the candidate if the candidate were to be elected to serve as a member of the executive board; and (Please respond to the statutory requirements cited above).

N/A

(b) disclose whether or not the candidate is a member in good standing for the purpose of this paragraph, a candidate shall not be deemed to be in "good standing" if the candidate has any unpaid or past due assessments or construction penalties that are required to be paid to the association. Please answer the question below by placing an X in the correct answer.

I am a member in "Good Standing" with the Association: Yes x____ No ____

2.) Experience: What skills do you feel you have that will contribute to the Board and Association? (Optional):

I have personally been a homeowner in Dayton Nv for over 30 Years and have lived at the golf course since 2005. Where I was the head Pro to the golf course from 1991-1998. Then I was the General Manager from 1998-2006. I helped with the homeowners before the HOA was established.

3.) Why do you want to serve on the Board? (Optional):

I want to help with the growth in our community. I enjoy the people and feel now is the time for us to make positive changes going forward. As the new owner to the golf course, I feel that a good relationship between the owners, community and golf course is a positive way to move forward.

I reside in a unit with, am married to, domestic partners with, or am related by blood, adoption or marriage within the third degree of consanguinity or affinity to another person who is also a member of the executive board or is an officer of the association. ____ yes _x___ no If yes, please explain on a separate sheet of paper).

Note: Nothing cited in this disclosure is intended to prevent a potential candidate from running for the board of directors. Further, the Board will not prohibit a candidate from appearing on the ballot for failure to provide a disclosure statement, or for providing an inaccurate one or one with content that is defamatory, libelous or profane. Should a candidate not complete a disclosure statement, or should it contain content believed to be defamatory, libelous or profane, the board will note the fact in a statement to be included with election-related mailings. Further, a complaint may be filed with the Real Estate Division against the candidate who does not comply with the disclosure requirement.

Nominee Signature (Required): _____

By signing this form I acknowledge that NRS 116.31034 requires a candidate to make all disclosures required by NRS 116.31034 in writing to the Association with his/her candidacy information, and that the disclosures must be distributed by the Association to each Member of the Association, with the ballot, in the manner established in the Bylaws of the Association, for that candidate to be eligible for office. By signing this form I agree to allow the Association to release any of the information I have supplied on this form.

Exhibit # 2
Pg 2

CANDIDACY DISCLOSURE STATEMENT

(Please Print or Type)

Name James H. Kepler

Address 681 St. Andrews (Street) Dayton (City) Nv (State) 89403 (Zip)

Are you a unit owner? ..... ☒ Yes ☐ No

(NOTE: NRS 116.31034(1) states: Except as otherwise provided in subsection 5 of NRS 116.212, not later than the termination of any period of declarant's control, the units' owners shall elect an executive board of at least three members, all of whom must be units' owners.)

NRS 116.31034 (9) (a) & (b) and NRS 116.31034 (10) (a) & (b) states the following:

9. Each person who is nominated as a candidate for membership on the executive board pursuant to subsection 4 must:
   (a) Make a good faith effort to disclose any financial, business, professional or personal relationship or interest that would result or would appear to a reasonable person to result in a potential conflict of interest for the candidate if the candidate were to be elected to serve as a member of the executive board; and
   (b) Disclose whether the candidate is a member in good standing. For the purposes of this paragraph, a candidate shall not be deemed to be in "good standing" if the candidate has any unpaid and past due assessments or construction penalties that are required to be paid to the association.
10. Except as otherwise provided in subsections 11 and 12, unless a person is appointed by the declarant:
   (a) A person may not be a candidate for or member of the executive board or an officer of the association if:
      (1) The person resides in a unit with, is married to, is domestic partners with, or is related by blood, adoption or marriage within the third degree of consanguinity or affinity to another person who is also a member of the executive board or is an officer of the association;
      (2) The person stands to gain any personal profit or compensation of any kind from a matter before the executive board of the association; or
      (3) The person, the person's spouse or the person's parent or child, by blood, marriage or adoption, performs the duties of a community manager for that association.

   (b) A person may not be a candidate for or member of the executive board of a master association or an officer of that master association if the person, the person's spouse or the person's parent or child, by blood, marriage or adoption, performs the duties of a community manager for:
      (1) That master association; or
      (2) Any association that is subject to the governing documents of that master association.

Please use the following lines to respond to the statutory requirements pursuant to NRS 116.31034 (9) (a)

Attach additional sheets, if necessary: See Attached Statement JK

I am a candidate in good standing pursuant to NRS 116.31034(9) (b): ..... ☒ Yes ☐ No

If no, please explain: _____

Please indicate all that apply to your relation to any board members, officer(s) of the association or community managers:

I am:

- ☐ Residing within the same unit as a board member or officer.
- ☐ Married to a board member or officer.
- ☐ Domestic partners with a board member or officer.
- ☒ **None of the above**

Related to a board member by:

- ☐ Blood
- ☐ Adoption
- ☐ Marriage within the third degree of consanguinity
- ☐ Affinity to another person
- ☒ **None of the above**

The candidate must make all disclosures required pursuant to this subsection in writing to the association with his or her candidacy information. Except as otherwise provided in this subsection, the association shall distribute the disclosures, on behalf of the candidate, to each member of the association with the ballot or, in the event ballots are not prepared and mailed pursuant to subsection 5, in the next regular mailing of the association. The association is not obligated to distribute any disclosure pursuant to this subsection if the disclosure contains information that is believed to be defamatory, libelous or profane.

Any additional information provided by the candidate for the executive board is voluntary and is not a requirement under NRS 116.31034.

James H. Kepler
Signature of candidate

5/26/2021
Date

Revised 7/18/19

CICC0173

Exhibit #2
Pg 3

March 23, 2021

To Whom it May Concern:

My name is Jim Kepler, Sr. I have been a resident of Dayton Valley since 1991. As a Class A PGA Golf Professional for 36 years and present during the inception of Dayton Valley Golf Course I feel I have the dedication necessary to be an effective and knowledgeable asset to the Homeowner's Association Board.

I personally purchased a home on the golf course in 2005 and have watched the Dayton Valley Gated Community grow from 6 homes to over 800 homes. Previously as the General Manager from 1998-2006 and then being rehired in 2018 to manage again, I have worked extensively with the Developers, the HOA and County Officials to make DV a great community to live.

My wife and I have raised six children here and we are committed to the Dayton community. I have established not only business relationships but community relationships with the education system, youth sports, Veterans, Water, Sewer, County Fire Department, Lyon County Public Works, Chamber of Commerce and Community Roots.

I have formed lasting relationships with the Homeowner's on the golf course and in the surrounding community. In December 2020, with the support of Dayton Valley homeowners and outside investors, we completed the purchase of Dayton Valley Golf Course. As such, I have a vested interest in seeing the community continue to flourish.

I also want to assure the board that if there are potential conflicts of interest, I will always recuse myself.

I would appreciate your support for a position on the board.

Sincerely, Jim Kepler, Sr.

Case 2021-761

Allegation #2

Exhibit #3

Exhibit #3
Pg 1

WHEN RECORDED MAIL TO:
Three.J. .Inc.
51 Palmer Drive
Dayton, NV 89403

16-361-39,35&37
16-362-16 &17

R.P.T.T. $3,250.00

ESCROW NO. 002108324
Title 00011972

CORPORATION
GRANT, BARGAIN and SALE DEED

THIS INDENTURE WITNESSETH: That

COMLAW NO. 445 LIMITED, a United Kingdom corporation

in consideration of $1.00, the receipt of which is hereby acknowledged, does hereby Grant, Bargain, Sell and Convey to

THREE-J, INC., a Delaware corporation

and to the heirs and assigns of such Grantee forever, all that real property situated in the unincorporated area County of Lyon, State of Nevada, bounded and described in Exhibit A attached hereto and made a part hereof.

Together with all and singular the tenements, hereditaments and appurtenances thereunto belonging or in anywise appertaining, and any reversions, remainders, rents, issues or profits thereof.

Dated: December 15, 2000

COMLAW NO. 445 LIMITED, a United Kingdom corporation

By: James P. Shinehouse

Its: Director

STATE OF Nevada)
) SS.
COUNTY OF Carson City)

This instrument was acknowledged before me on December 15, 2000 by James P. Shinehouse.

Doris E. Howell
Notary Public

DORIS E. HOWELL
Notary Public - State of Nevada
Appointment Recorded in County of Carson City
My Appointment Expires Feb 13, 2002
94-0798-3

11/10/00

255373

Unofficial Copy

Exhibit #3
Pg 2

RECORDING REQUESTED BY:
STEWART TITLE COMPANY

WHEN RECORDED MAIL TO:
Three-J, Inc.
51 Palmer Drive
Dayton, NV 89403

MAIL TAX STATEMENTS TO:
Same

Unofficial Copy

255373

11/10/00

Exhibit #3
Pg 3

Exhibit "A"

LEGAL DESCRIPTION

Order No.: 00011972-AMM

The land referred to herein is situated in the State of Nevada, County of, described as follows:

PARCEL ONE:

A portion of Section 17, Township 16 North, Range 22 East, M.D.B. & M., described as follows:

Parcel 3, as shown on that certain parcel map for COMLAW NO. 445 LIMITED, recorded April 19, 1999, as Document No. 232541, in the office of the Lyon County Recorder.

ASSESSOR'S PARCEL NO. 16-361-39

PARCEL TWO:

A portion of Sections 18 & 19, Township 16 North, Range 22 East, M.D.B. & M., described as follows:

Parcel 3, as shown on that certain parcel map for COMLAW NO. 445 LIMITED, recorded April 19, 1999 as Document No. 232542, in the office of the Lyon County Recorder.

ASSESSOR'S PARCEL NO. 16-361-35

PARCEL THREE:

A portion of Sections 17, Township 16 North, Range 22 East, M.D.B. & M., described as follows:

Parcel 2, as shown on that certain parcel map for COMLAW NO. 445 LIMITED, recorded April 19, 1999 as Document No. 232541, in the office of the Lyon County Recorder.

ASSESSOR'S PARCEL NO. 16-361-37

PARCEL FOUR:

Being a portion of Section 18, Township 16 North, Range 22 East, M.D.B. & M., and described as follows:

Parcel 1 as shown on that certain Parcel Map for Davada Development Corporation, Filed in the Office of the Lyon County

Continued on next page

255373

STEWART TITLE
Guaranty Company

Unofficial Copy

STEWART TITLE GUARANTY Fax:(775)-882-2945 NOV 9 2000 10:26 P.05

Exhibit #3
Pg 4

LEGAL DESCRIPTION - continued
Order No.:00011972-AMM

Recorders Office on September 12, 1986 as File No. 102039.

EXCEPTING THEREFROM all Lots located within the exterior boundary lines of Dayton Valley Country Club Unit 1, Recorded August 17, 1989 as File No. 126598, and amended by that certain Boundary Line Adjustment Map Recorded October 23, 1990 as File No. 136828.

ASSESSOR'S PARCEL NO. 16-362-16 and 17

Unofficial Copy

255373

OFFICIAL RECORDS
LYON COUNTY, NEV.
RECORD REQUESTED BY
STEWART TITLE OF N.N.
00 DEC 12 PM 2:16
MARY S. GILLIGAN
COUNTY RECORDER
FEE 10.00 DEP. DW

Exhibit #3
Pg 5

SENT BY:Xerox Telecopier 7021 ;11-28-00 ; 10:58 ; 7758827818→ 1 717 285 7058;# 2
NOV. 27. 2000 6:34PM NO. 3032 P. 2/4

STATE OF NEVADA
DECLARATION OF VALUE

1. Assessor Parcel Number(s):
   a) 16-361-39, 35 & 37
   b) 16-362-16 & 17
   c)
   d)

2. Type of Property:
   a) ____ Vacant Land b) ____ Single Family Res.
   c) ____ Condo/Townhouse d) ____ 2-4 Plex
   e) ____ Apartment Bldg. f) XX Comm'l/Ind'l.
   g) ____ Agricultural h) ____ Mobile Home
   i) Other:

FOR RECORDERS OPTIONAL USE ONLY
Document/Instrument No.: 255373
Book: ____ Page: ____
Date of Recording: 12-12-00
Notes: Construction loan

3. Total Value/Sales Price of Property $ 2,500,000.00
   Deduct Assumed Liens and/or Encumbrances: $ ____
   Provide recording information: Doc/Instrument No.: ____ Book: ____ Page: ____
   Transfer Tax Value per NRS 375.010, Section 2: $ ____
   Real Property Transfer Tax Due: $ 3,250.00

4. If Exemption Claimed:
   a. Transfer Tax Exemption, per NRS 375.090, Section: ____
   b. Explain Reason for Exemption: ____

5. Partial Interest: Percentage being transferred: ____ %

The undersigned Seller (Grantor)/Buyer (Grantee), declares and acknowledges, under penalty of perjury, pursuant to NRS 375.060 and NRS 375.110, that the information provided is correct to the best of their information and belief, and can be supported by documentation if called upon to substantiate the information provided herein. Furthermore, the parties agree that disallowance of any claimed exemption or other determination of additional tax due, may result in a penalty of 10% of the tax due plus interest at 1 1/2% per month. Pursuant to NRS 375.030, the Buyer and Seller shall be jointly and severally liable for any additional amount owed.

SELLER (GRANTOR) INFORMATION

Seller Signature:
Print Name: Conlaw No. 445, Limited
Address: 3725 Electronics Way
City/State/Zip: Lancaster, PA 17064
Telephone:
Capacity:

BUYER (GRANTEE) INFORMATION

Buyer Signature:
Print Name: Three-J Inc.
Address: 51 Palmer Drive
City/State/Zip: Dayton NV 89403
Telephone:
Capacity:

COMPANY REQUESTING RECORDING

Company Name: STEWART TITLE OF Northern Nevada Title #00011972
Escrow No.: 092108324

(AS A PUBLIC RECORD THIS FORM MAY BE RECORDED/MICROFILMED)

Official Copy

Case 2021-761

Allegation #2

Exhibit #4

Lyon County
Nevada

Exhibit #4
Pg1

Parcel 016-361-35

Owners

TOUR SPECS GOLF MANAGEMENT LLC
681 ST ANDREW DR
DAYTON, NV 89403-0000

Parcel Summary

Location	0 DAYTON VALLEY, NV
Use Code	450: Golf Course
Tax District	8.8: Central Lyon Fire District
Map Parcel	PAR 3
Plat Maps	016-36.1.pdf (720kb) 016-36.2.pdf (498kb) 016-36.3.pdf (405kb)
Map Documents	PAR182901 PAR232542

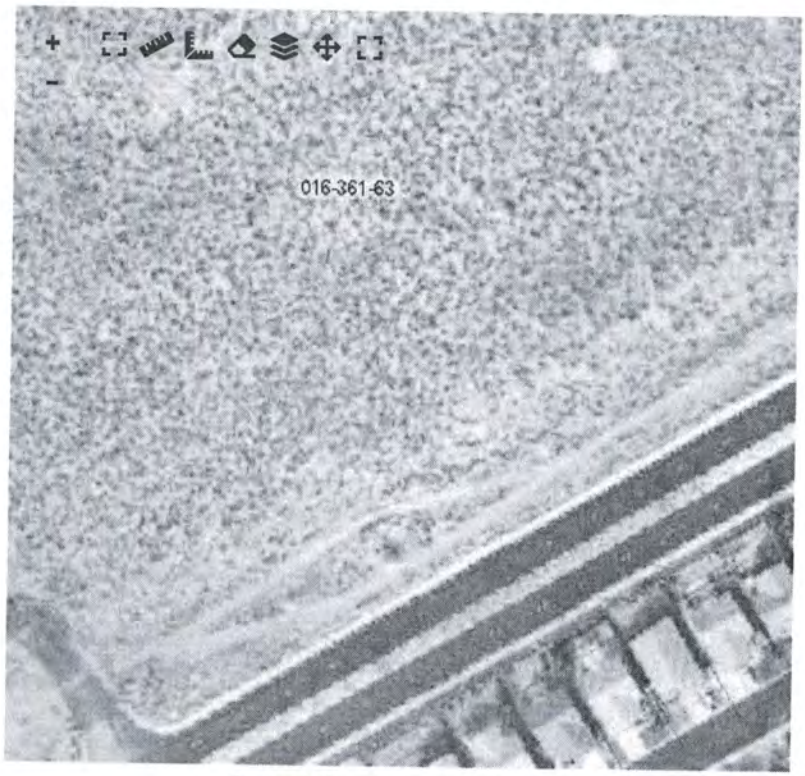

Go to full page interactive GIS

Value History

	2021	2020	2019	2018	2017	2016	2015
Total Building Value	$0	$790,117	$790,117	$790,117	$790,117	$790,117	$790,117
Total Extra Features Value	$2,015,708	$0	$0	$0	$0	$0	$0
Total Land Value	$130,207	$130,200	$130,200	$130,200	$130,200	$130,200	$130,200
Taxable Value	$2,145,915	$920,317	$920,317	$920,317	$920,317	$920,317	$920,317
Net Exemptions Value	$0	$0	$0	$0	$0	$0	$0
Net Assessed Value	$751,070	$322,111	$322,111	$322,111	$322,111	$322,111	$322,111
New Improvements	$0	$0	$0	$0	$0	$0	$0
New Land	$0	$0	$0	$0	$0	$0	$0

Document/Transfer/Sales History

Official Record	Date	Type	V/I	Dcl Value	Ownership
626936	2020-12-17	RE-RECORDED DOCUMENT	Vacant	$0	Grantee: TOUR SPECS GOLF MANAGEMENT LLC
626921	2020-12-16	GRANT BARGAIN SALE DEED	Improved	$1,165,000	Grantee: TOUR SPECS GOLF MANAGEMENT LLC

Official Record	Date	Type	V/I	Dcl Value	Exhibit #4 Pg 2 Ownership
458577	2010-04-06	GRANT BARGAIN SALE DEED	Improved	$750,000	Grantor: THREE-J INC Grantee: DAYTON VALLEY GOLF COURSE LLC
260136	2001-04-25	EASEMENT/RIGHT-OF-WAY DEED	Vacant	$0	Grantee: DAYTON VALLEY INVESTORS LLC
255373	2000-12-12	GRANT BARGAIN SALE DEED	Vacant	$2,500,000	Grantor: COMLAW NO 445 LIMITED Grantee: THREE-J INC
232542	1999-04-19	PARCEL MAP	Vacant	$0	Grantee: COMLAW NO 445 LIMITED
217292	1998-04-09	GRANT BARGAIN SALE DEED	Vacant	$0	Grantee: COMLAW NO 445 LIMITED
182901	1995-06-07	PARCEL MAP	Vacant	$0	Grantee: JOHN LAWRENCE (NEVADA) INC
139969	1991-03-05	EASEMENT/RIGHT-OF-WAY DEED	Vacant	$0	Grantee: JOHN LAWRENCE (NEVADA) INC
138203	1990-12-10	RELEASE DEFERRED TAX LIEN	Vacant	$0	Grantee: JOHN LAWRENCE (NEVADA) INC
124613	1989-05-24	BOUNDARY ADJUSTMENT MAP	Vacant	$0	
111626	1987-11-17	GREEN BELT APPROVED	Vacant	$0	
105478	1987-02-13	GRANT BARGAIN SALE DEED	Vacant	$0	
102038	1986-09-12	PARCEL MAP	Vacant	$0	
92698	1985-05-15	GREEN BELT APPROVED	Vacant	$0	
90464	1984-12-31	GRANT BARGAIN SALE DEED	Vacant	$0	
90460	1984-12-31	GRANT BARGAIN SALE DEED	Vacant	$0	
90459	1984-12-31	EXECUTORS/ADMINISTRATORS DEED	Vacant	$0	
90279	1984-12-17	ESTATE/DECREE OF DISTRIBUTION	Vacant	$0	

Buildings

None

Extra Features

Code	Description	Length	Width	Units	Unit Price	AYB	Repl Cost	% Good Condition	Depreciated Value*	Notes
HOLE3	GOLF HOLE PRIVATE CL3 1/19			15.00	$166,892	1990	$2,503,380	54%	$1,339,308	
GBRIDGES	GOLF BRIDGE TUNNEL PER HOLE/CLASS 1/19			2.00	$14,732	1990	$29,464	54%	$15,763	
LAKES	PER SQ FT 1/19			928214.00	$1	1990	$1,197,396	54%	$640,607	
SHEDS3	SHEDS TYPE 1 1=DIRT 2,3=CONCRETE 1/19	18	28	504.00	$19	1990	$9,329	54%	$4,991	
SHEDS3	SHEDS TYPE 1 1=DIRT 2,3=CONCRETE 1/19			256.00	$21	1994	$5,372	60%	$3,196	

CICC0183

Code	Description	Length	Width	Units	Unit Price	AYB	Repl Cost	% Good Condition	Depreciated Value*	Notes
FIXT 4	FIXTURES FOR CLASS 4 BLDGS 1/19			8.00	$2,488	1994	$19,904	60%	$11,843	

*RCNLD: Replacement Cost New, Less Depreciation

Exhibit #4 pg 3

Personal Property

None

Land Lines

Code	Description	Zone	Front	Depth	Land Units	Unit Type	Acreage	Total Adj	Value	Notes
450	Golf Course	NR1			146.63	RATE	146.63	0.74	$130,207	

Disclaimer

All parcel data on this page is for use by the Lyon County Property Appraiser for assessment purposes only. The summary data on this page may not be a complete representation of the parcel or of the improvements thereon. Building information, including unit counts and number of permitted units, should be verified with the appropriate building and planning agencies. Zoning information should be verified with the appropriate planning agency. All parcels are reappraised each year. This is a true and accurate copy of the records of the Lyon County Assessor's Office as of May 07, 2021.

Home | Accessibility | ©2020 GSA, Government Software Assurance Corp

Case 2021-761

Allegation #2

Exhibit #5

DOC # 377318
03/14/2006 04:18 PM
Official Record
Requested By
STEWART TITLE CARSON
Lyon County - NV
Mary C. Milligan - Recorder
Page 1 of 6 Fee: $19.00
Recorded By: JKS RPTT:

0377318

Exhibit #5
Pg 1

A.P.N. 016-361-41; 016361-43; and
016-361-56 (formerly 016-361-42)

R.P.T.T. # 3

RECORDING REQUESTED BY
DAYTON VALLEY INVESTORS, LLC
WHEN RECORDED MAIL TO:
MAIL TAX STATEMENTS TO:

DAYTON VALLEY INVESTORS, LLC
5525 KIETZKE LANE, SUITE 102
RENO NV 89511

CORRECTIVE GRANT, BARGAIN, SALE DEED

THIS INDENTURE WITNESSETH: That DAYTON VALLEY INVESTORS, LLC, a Nevada limited liability company, *** whose address is 5525 Kietzke Lane, Suite 102, Reno, Nevada 89511, and THREE J, INC., a Delaware corporation, whose address is C/O Allison MacKenzie et al., 402 North Division Street, Carson City, Nevada 89701 *****WHO ACQUIRED TITLE AS DAYTON VALLEY INVESTORS, A LLC, A NEVADA LIMITED LIABILITY COMPANY**
In consideration of $10.00, the receipt of which is hereby acknowledged, do hereby Grant, Bargain Sell and Convey to THREE J, INC., a Delaware corporation,

and to the heirs and assigns of such Grantee forever, all that real property situated in the County of Lyon, State of Nevada, bounded and described as follows:

SEE EXHIBIT "A" and EXHIBIT "B" ATTACHED HERETO AND MADE A PART HEREOF

Together with all and singular the tenements, hereditaments and appurtenances thereunto belonging or *in anywise appertaining, and any reversions, remainders, rents, issues or profits thereof.*

Unofficial Copy

Exhibit #5
Pg 2

THIS DEED IS BEING RECORDED TO CORRECT the format of the conveyance document intended for utilization in deed recorded February 4, 2005 as document No. 342253; and to CORRECTLY IDENTIFY THE NAME OF THE FIRST GRANTOR as DAYTON VALLEY INVESTORS, LLC.

DATED this 3 day of March, 2006.

DAYTON VALLEY INVESTORS, LLC
a Nevada limited liability company

By Wade Dayton, LLC,
a Nevada limited liability company
Its: Manager

By _____
JOE WADE
Its: Chief Executive Officer

By _____
PATRICIA M. SNYDER
Its: President

By Lakemont Dayton, LLC,
a Nevada limited liability company
Its: Manager

By _____
Greg Peitzmeier
Its: Nevada Division President

THREE J, INC.,
a Delaware corporation

By _____
James H. Kepler
Its: Vice President

This instrument was acknowledged before me on March 2, 2006, by Joe Wade as Chief Executive Officer of Wade Dayton, LLC, Manager of Dayton Valley Investors, LLC.

_____
Notary Public
(My commission expires: 3/15/08)

BARBARA A. HUNSAKER
Notary Public, State of Nevada
Appointment No. 00-61389-2
My Appt. Expires Mar 15, 2008

Unofficial Copy

Exhibit #5
Pg 3

This instrument was acknowledged before me on March 2, 2006, by Patricia M. Snyder as President of Wade Dayton, LLC, Manager of Dayton Valley Investors, LLC.

Barbara A. Hunsaker
Notary Public
(My commission expires: 3/15/08)

BARBARA A. HUNSAKER
Notary Public, State of Nevada
Appointment No. 00-61389-2
My Appt. Expires Mar 15, 2008

This instrument was acknowledged before me on March 2, 2006, by Greg Peitzmeier as Nevada Division President of Lakemont Dayton, LLC, Manager of Dayton Valley Investors, LLC.

Barbara A. Hunsaker
Notary Public
(My commission expires: 3/15/08)

BARBARA A. HUNSAKER
Notary Public, State of Nevada
Appointment No. 00-61389-2
My Appt. Expires Mar 15, 2008

This instrument was acknowledged before me on March 3, 2006, by James H. Kepler, Vice President of Three J, Inc.

Barbara A. Hunsaker
Notary Public
(My commission expires: 3/15/08)

BARBARA A. HUNSAKER
Notary Public, State of Nevada
Appointment No. 00-61389-2
My Appt. Expires Mar 15, 2008

Unofficial Copy

Exhibit #5
Pg 4

EXHIBIT "A"
ADJUSTED PARCEL 2B

A parcel of land situate in Section 17, Township 16 North, Range 22 East, M.D.M., Dayton, Lyon County, Nevada, and more particularly described as follows:

Beginning at the Southwest corner of said Section 17;
thence North 00°32'19" East a distance of 25.56 feet;
thence North 74°32'29" East a distance of 277.14 feet;
thence along a tangent circular curve to the left with a radius of 626.18 feet and a central angle of 16°16'56" an arc length of 177.94 feet;
thence North 58°15'33" East a distance of 476.98 feet;
thence South 17°33'09" East a distance of 452.35 feet;
thence North 89°24'52" West a distance of 971.98 feet to the point of Beginning.

Basis of Bearings: Parcel Map Number 232541 of the Official Records of Lyon County, Nevada.

Unofficial Copy

Exhibit #5
Pg 5

EXHIBIT "B"
ADJUSTED PARCEL 3B

A parcel of land situate in Section 17, Township 16 North, Range 22 East, M.D.M., Dayton, Lyon County, Nevada, and more particularly described as follows:

Beginning at the West ¼ corner of said Section 17;
thence North 00°39'59" East a distance of 600.19 feet;
thence along a tangent circular curve to the left with a radius of 600.00 feet and a central angle of 31°03'33" an arc length of 325.25 feet;
thence North 30°23'34" West a distance of 35.02 feet;
thence North 59°36'26" East a distance of 423.72 feet;
thence South 30°23'34" East a distance of 715.00 feet;
thence South 01°03'02" West a distance of 363.79 feet;
thence South 88°56'58" East a distance of 256.02 feet;
thence South 32°42'30" East a distance of 229.07 feet;
thence South 00°00'51" West a distance of 394.18 feet;
thence South 55°59'39" West a distance of 204.46 feet;
thence from a tangent which bears South 34°00'21" East, along a circular curve to the right with a radius of 350.00 feet and a central angle of 03°17'56" an arc length of 20.15 feet;
thence South 30°42'25" East a distance of 53.62 feet;
thence along a tangent circular curve to the left with a radius of 365.00 feet and a central angle of 39°21'42" an arc length of 250.75 feet;
thence with a non-tangent line South 65°07'48" East a distance of 232.48 feet;
thence from a tangent which bears South 70°04'07" East, along a circular curve to the right with a radius of 350.00 feet and a central angle of 23°59'40" an arc length of 146.57 feet;
thence with a non-tangent line South 03°39'43" West a distance of 69.80 feet;
thence South 16°44'23" East a distance of 69.43 feet;
thence South 14°43'01" East a distance of 73.01 feet;
thence South 08°21'06" East a distance of 73.00 feet;
thence South 06°04'01" East a distance of 73.01 feet;
thence South 00°16'53" West a distance of 72.99 feet;
thence South 04°39'25" West a distance of 72.99 feet;
thence South 03°23'40" West a distance of 80.38 feet;
thence South 01°57'23" West a distance of 80.50 feet;
thence South 02°43'29" East a distance of 80.48 feet;
thence South 04°14'43" East a distance of 80.46 feet;
thence South 04°40'40" East a distance of 244.50 feet;
thence South 69°28'04" West a distance of 181.98 feet;
thence South 75°55'28" West a distance of 47.72 feet;
thence South 86°43'12" West a distance of 50.90 feet;
thence North 83°40'14" West a distance of 110.08 feet;
thence North 80°36'53" West a distance of 168.19 feet;
thence South 75°01'23" West a distance of 20.62 feet;

Uncertified Copy

Exhibit #5
Pg 6.

thence North 57°23'59" West a distance of 100.00 feet;
thence North 21°00'36" West a distance of 100.00 feet;
thence North 18°52'53" East a distance of 803.14 feet;
thence North 70°00'00" West a distance of 277.55 feet;
thence South 17°00'00" West a distance of 840.00 feet;
thence South 27°07'42" West a distance of 200.00 feet;
thence South 37°00'00" West a distance of 200.00 feet;
thence South 58°43'30" West a distance of 170.00 feet;
thence South 83°13'35" West a distance of 80.00 feet;
thence South 55°20'16" West a distance of 4.40 feet;
thence from a tangent which bears North 24°58'44" West, along a circular curve to the left with a radius of 455.67 feet and a central angle of 15°06'25" an arc length of 120.15 feet;
thence with a non-tangent line North 28°18'00" East a distance of 1175.39 feet;
thence North 43°09'15" West a distance of 85.02 feet;
thence North 30°15'25" West a distance of 35.12 feet;
thence North 63°17'12" West a distance of 110.00 feet;
thence South 86°04'04" West a distance of 100.00 feet;
thence South 53°40'29" West a distance of 85.00 feet;
thence South 20°37'05" West a distance of 200.00 feet;
thence South 64°18'36" West a distance of 212.08 feet;
thence North 00°32'19" East a distance of 1330.05 feet to the point of Beginning.

Basis of Bearings: Parcel Map Number 232541 of the Official Records of Lyon County, Nevada.

Description Prepared By:
Don M. McHarg, PLS 4787
Summit Engineering Corp.
5405 Mae Anne Avenue
Reno, Nevada 89523

PROFESSIONAL LAND SURVEYOR · STATE OF NEVADA
DON M. McHARG
Exp: 12-31-05
No. 4787

1-5-05

Unofficial Copy

State of Nevada
Declaration of Value

Exhibit #5
Pg 4

DOC # DV-377318
03/14/2006 04:18 PM
Official Record

Requested By
STEWART TITLE CARSON

Lyon County - NV
Mary C. Milligan - Recorder

Page 1 of 1 Fee: $19.00
Recorded By: JKS RPTT:

FOR RECORDER'S OPTIONAL USE ONLY
Document/Instrument #:
Book: Page:
Date of Recording:
Notes:

1. Assessor Parcel Number(s)
   a) 16-361-41, 16-361-43
   b) 16-361-56 FORMERLY
   c) 16-361-42
   d)
2. Type of Property:
   a) ☒ Vacant Land b) ☐ Single Fam. Res.
   c) ☐ Condo/Twnhse d) ☐ 2-4 Plex
   e) ☐ Apt. Bldg. f) ☐ Comm'l/Ind'l
   g) ☐ Agricultural h) ☐ Mobile Home
   i) ☐ Other
3. Total Value/Sales Price of Property: $
   Deed in Lieu of Foreclosure Only (value of property) $
   Transfer Tax Value: $
   Real Property Transfer Tax Due: $ 0
4. **If Exemption Claimed:**
   a. Transfer Tax Exemption, per NRS 375.090, Section: #3
   b. Explain Reason for Exemption: THIS DEED IS BEING RECORDED TO CORRECT THE FORMAT OF THE CONVEYANCE DOCUMENT FROM A QUIET CLAIM DEED TO A GRANT, BARGAIN, SALE DEED AND CORRECT THE NAME OF THE GRANTEE ON DOC NO. 342253
5. Partial Interest: Percentage being transferred: %

The undersigned declares and acknowledges, under penalty of perjury, pursuant to NRS 375.060 and NRS 375.110, that the information provided is correct to the best of their information and belief, and can be supported by documentation if called upon to substantiate the information provided therein. Furthermore, the disallowance of any claimed exemption, or other determination of additional tax due, may result in a penalty of 10% of the tax due plus interest at 1% per month.

Pursuant to NRS 375.030, the Buyer and Seller shall be jointly and severally liable for any additional amount owed.

Signature Capacity ESCROW AGENT
Signature Capacity

SELLER (GRANTOR) INFORMATION (REQUIRED)
Print Name: DAYTON VALLEY INVESTORS
Address: 5525 KIETZKE, LN SUITE 102
City: RENO
State: NV Zip 89511

BUYER (GRANTEE) INFORMATION (REQUIRED)
Print Name: SAME
Address:
City:
State: Zip

COMPANY/PERSON REQUESTING RECORDING
(REQUIRED IF NOT THE SELLER OR BUYER)
Print Name: STEWART TITLE Escrow #
Address: 111 WEST PROCTOR
City: CARSON CITY State NV Zip 89703

(AS A PUBLIC RECORD THIS FORM MAY BE RECORDED)

OFFICIAL COPY

Case 2021-761

Allegation #2

Exhibit #6

Exhibit #6
Pg1

ENTITY INFORMATION

ENTITY INFORMATION

Entity Name:

TOUR SPECS GOLF MANAGEMENT, LLC

Entity Number:

E7519202020-3

Entity Type:

Domestic Limited-Liability Company (86)

Entity Status:

Active

Formation Date:

06/29/2020

NV Business ID:

NV20201821326

Termination Date:

Perpetual

Annual Report Due Date:

6/30/2021

Series LLC:

☐

Restricted LLC:

☑

REGISTERED AGENT INFORMATION

Name of Individual or Legal Entity:

ALLISON MACKENZIE, LTD.

Exhibit #6
Pg 2

Status:

Active

CRA Agent Entity Type:

Registered Agent Type:

Commercial Registered Agent

NV Business ID:

Office or Position:

Jurisdiction:

NEVADA

Street Address:

402 NORTH DIVISION STREET, Carson City, NV, 89703, USA

Mailing Address:

Individual with Authority to Act:

MIKE PAVLAKIS

Fictitious Website or Domain Name:

OFFICER INFORMATION

☐ **VIEW HISTORICAL DATA**

Title	Name	Address	Last Updated	Status
Manager	Reliance Golf Management, LLC	681 St. Andrews, Dayton, NV, 89403, USA	06/29/2020	Active

Page 1 of 1, records 1 to 1 of 1

Filing History Name History Mergers/Conversions

Return to Search Return to Results

Exhibit #6
Pg 3

Case 2021-761

Allegation #2

Exhibit #7

Exhibit 47
Pg 1

ENTITY INFORMATION

ENTITY INFORMATION

Entity Name:

RELIANCE GOLF MANAGEMENT DAYTON VALLEY MANAGEMENT, LLC

Entity Number:

E8056692020-9

Entity Type:

Domestic Limited-Liability Company (86)

Entity Status:

Active

Formation Date:

07/24/2020

NV Business ID:

NV20201848423

Termination Date:

Perpetual

Annual Report Due Date:

7/31/2021

Series LLC:

☐

Restricted LLC:

☐

REGISTERED AGENT INFORMATION

Name of Individual or Legal Entity:

ALLISON MACKENZIE, LTD.

Exhibit #7
Pg 2

Status:

Active

CRA Agent Entity Type:

Registered Agent Type:

Commercial Registered Agent

NV Business ID:

Office or Position:

Jurisdiction:

NEVADA

Street Address:

402 NORTH DIVISION STREET, Carson City, NV, 89703, USA

Mailing Address:

Individual with Authority to Act:

MIKE PAVLAKIS

Fictitious Website or Domain Name:

OFFICER INFORMATION

☐ **VIEW HISTORICAL DATA**

Title	Name	Address	Last Updated	Status
Manager	Jim Kepler	681 St. Andrews, Dayton, NV, 89403, USA	07/24/2020	Active

Page 1 of 1, records 1 to 1 of 1

Filing History Name History Mergers/Conversions

Return to Search Return to Results

Exhibit #7
Pg 3

Case 2021-761

Allegation #2

Exhibit #8

Exhibit #8
Pg1

ENTITY INFORMATION

ENTITY INFORMATION

Entity Name:

RELIANCE GOLF MANAGEMENT, L.L.C.

Entity Number:

E0187062017-3

Entity Type:

Domestic Limited-Liability Company (86)

Entity Status:

Active

Formation Date:

04/19/2017

NV Business ID:

NV20171253159

Termination Date:

Perpetual

Annual Report Due Date:

4/30/2022

Series LLC:

☐

Restricted LLC:

☐

REGISTERED AGENT INFORMATION

Name of Individual or Legal Entity:

JAMES H. KEPLER, SR CEO

Exhibit #8
Pg 2

Status:

Active

CRA Agent Entity Type:

Registered Agent Type:

Non-Commercial Registered Agent

NV Business ID:

Office or Position:

Jurisdiction:

Street Address:

681 ST ANDREWS DRIVE, DAYTON, NV, 89403, USA

Mailing Address:

Individual with Authority to Act:

Fictitious Website or Domain Name:

OFFICER INFORMATION

☐ **VIEW HISTORICAL DATA**

Title	Name	Address	Last Updated	Status
Manager	JAMES H KEPLER	681 ST. ANDREW DR, DAYTON, NV, 89403, USA	02/01/2019	Active
Manager	DAVID E KEPLER II	681 ST. ANDREW DR, DAYTON, NV, 89403, USA	02/01/2019	Active

Page 1 of 1, records 1 to 2 of 2

Filing History Name History Mergers/Conversions

Return to Search Return to Results

Exhibit #8
Pg 3

CICC0204

Case 2021-761

Allegation #2

Exhibit #9

Exhibit #9
Pg1

ENTITY INFORMATION

ENTITY INFORMATION

Entity Name:

FRIENDS OF DAYTON VALLEY COMMUNITY, LLC

Entity Number:

E9169822020-8

Entity Type:

Domestic Limited-Liability Company (86)

Entity Status:

Active

Formation Date:

09/17/2020

NV Business ID:

NV20201894390

Termination Date:

Perpetual

Annual Report Due Date:

9/30/2021

Series LLC:

☐

Restricted LLC:

☑

REGISTERED AGENT INFORMATION

CICC0206

Name of Individual or Legal Entity:

ALLISON MACKENZIE, LTD.

Exhibit # 9
Pg 2

Status:

Active

CRA Agent Entity Type:

Registered Agent Type:

Commercial Registered Agent

NV Business ID:

Office or Position:

Jurisdiction:

NEVADA

Street Address:

402 NORTH DIVISION STREET, Carson City, NV, 89703, USA

Mailing Address:

Individual with Authority to Act:

MIKE PAVLAKIS

Fictitious Website or Domain Name:

OFFICER INFORMATION

☐ **VIEW HISTORICAL DATA**

Title	Name	Address	Last Updated	Status
Manager	James Kepler	681 St. Andrews, Dayton, NV, 89403, USA	09/17/2020	Active

Page 1 of 1, records 1 to 1 of 1

Filing History Name History Mergers/Conversions

Return to Search Return to Results

Exhibit # 9
Pg 3

Case 2021-761

Allegation #2

Exhibit #10

9874888-14-3-4

DAYTON VALLEY COMMNITY ASSOCIATION

Exhibit #10
Pg 1

Candidacy Disclosure Statement

s form is provided for Homeowners who wish to run for the Board of Directors (you may nominate yourself). You must return this form to us no later than **March 24, 2021 by 5:00 PM.** The official meeting notice advising the exact date, time and location of the Election meeting will be mailed to all homeowners eligible to vote at a later date. There are seven (7) seats on the Board to fill.

NAME OF NOMINEE: DOUG KREIE

ARE YOU A HOMEOWNER IN THE ASSOCIATION STATED ABOVE? _____ _____

(YES) NO

Per NRS 116.31034 (5) (a) and (b), please complete the following information regarding your candidacy. Please print your responses.

1.) Each person whose name is placed on the ballot as a candidate for a member of the executive Board must:

(a) Make a good faith effort to disclose any financial, business, professional or personal relationship or interest that would result or would appear to a reasonable person to result in a potential conflict of interest for the candidate if the candidate were to be elected to serve as a member of the executive board; and (Please respond to the statutory requirements cited above).

(b) disclose whether or not the candidate is a member in good standing for the purpose of this paragraph, a candidate shall not be deemed to be in "good standing" if the candidate has any unpaid or past due assessments or construction penalties that are required to be paid to the association. Please answer the question below by placing an X in the correct answer.

I am a member in "Good Standing" with the Association: Yes X **No** ___

2.) Experience: What skills do you feel you have that will contribute to the Board and Association? (Optional):

Self EMPLOYed FOR 30 YEARS DEALING IN ALL ASPECTS OF BUSINESS

3.) Why do you want to serve on the Board? (Optional):

I HAVE BEEN ON THE BOARD for 2 YEARS AS ARCHITECURAN COMMITTE CHAIRMAN & WOULD LIKE TO CONTINUE.

I reside in a unit with, am married to, domestic partners with, or am related by blood, adoption or marriage within the third degree of consanguinity or affinity to another person who is also a member of the executive board or is an officer of the association. ____ yes ____ no If yes, please explain on a separate sheet of paper).

Note: Nothing cited in this disclosure is intended to prevent a potential candidate from running for the board of directors. Further, the Board will not prohibit a candidate from appearing on the ballot for failure to provide a disclosure statement, or for providing an inaccurate one or one with content that is defamatory, libelous or profane. Should a candidate not complete a disclosure statement, or should it contain content believed to be defamatory, libelous or profane, the board will note the fact in a statement to be included with election-related mailings. Further, a complaint may be filed with the Real Estate Division against the candidate who does not comply with the disclosure requirement.

Nominee Signature (Required): D. Kreie

By signing this form I acknowledge that NRS 116.31034 requires a candidate to make all disclosures required by NRS 116.31034 in writing to the Association with his/her candidacy information, and that the disclosures must be distributed by the Association to each Member of the Association, with the ballot, in the manner established in the Bylaws of the Association, for that candidate to be eligible for office. By signing this form I agree to allow the Association to release any of the information I have supplied on this form.

9874888 8759FCMP-2

Exhibit #10
Pg 2

CANDIDACY DISCLOSURE STATEMENT

(Please Print or Type)

Name DOUG KREIE

Address 144 SAWGRASS LN DAYTON NV. 89403
(Street) (City) (State) (Zip)

Are you a unit owner? ..... ☒ Yes ☐ No

(NOTE: NRS 116.31034(1) states: Except as otherwise provided in subsection 5 of NRS 116.212, not later than the termination of any period of declarant's control, the units' owners shall elect an executive board of at least three members, all of whom must be units' owners.)

NRS 116.31034 (9) (a) & (b) and NRS 116.31034 (10) (a) & (b) states the following:

9. Each person who is nominated as a candidate for membership on the executive board pursuant to subsection 4 must:
   (a) Make a good faith effort to disclose any financial, business, professional or personal relationship or interest that would result or would appear to a reasonable person to result in a potential conflict of interest for the candidate if the candidate were to be elected to serve as a member of the executive board; and
   (b) Disclose whether the candidate is a member in good standing. For the purposes of this paragraph, a candidate shall not be deemed to be in "good standing" if the candidate has any unpaid and past due assessments or construction penalties that are required to be paid to the association.
10. Except as otherwise provided in subsections 11 and 12, unless a person is appointed by the declarant:
   (a) A person may not be a candidate for or member of the executive board or an officer of the association if:
      (1) The person resides in a unit with, is married to, is domestic partners with, or is related by blood, adoption or marriage within the third degree of consanguinity or affinity to another person who is also a member of the executive board or is an officer of the association;
      (2) The person stands to gain any personal profit or compensation of any kind from a matter before the executive board of the association; or
      (3) The person, the person's spouse or the person's parent or child, by blood, marriage or adoption, performs the duties of a community manager for that association.

   (b) A person may not be a candidate for or member of the executive board of a master association or an officer of that master association if the person, the person's spouse or the person's parent or child, by blood, marriage or adoption, performs the duties of a community manager for:
      (1) That master association; or
      (2) Any association that is subject to the governing documents of that master association.

Please use the following lines to respond to the statutory requirements pursuant to NRS 116.31034 (9) (a)

Attach additional sheets, if necessary: I AM A MINORITY STOCKHOLDER IN TOUR SPECS

I am a candidate in good standing pursuant to NRS 116.31034(9) (b): ..... ☒ Yes ☐ No

If no, please explain: _____

Please indicate all that apply to your relation to any board members, officer(s) of the association or community managers:

I am:
- ☐ Residing within the same unit as a board member or officer.
- ☐ Married to a board member or officer.
- ☐ Domestic partners with a board member or officer.
- ☒ **None of the above**

Related to a board member by:
- ☐ Blood
- ☐ Adoption
- ☐ Marriage within the third degree of consanguinity
- ☐ Affinity to another person
- ☒ **None of the above**

The candidate must make all disclosures required pursuant to this subsection in writing to the association with his or her candidacy information. Except as otherwise provided in this subsection, the association shall distribute the disclosures, on behalf of the candidate, to each member of the association with the ballot or, in the event ballots are not prepared and mailed pursuant to subsection 5, in the next regular mailing of the association. The association is not obligated to distribute any disclosure pursuant to this subsection if the disclosure contains information that is believed to be defamatory, libelous or profane.

Any additional information provided by the candidate for the executive board is voluntary and is not a requirement under NRS 116.31034.

Signature of candidate _____ *Date* 6-2-2021

Exhibit #10
Pg 3

My name is Doug Kreie and I am running for reelection to the Board of Directors of the Dayton Valley Home Owners Association

I have 30 years' experience as a business owner. I have worked with financials and expense reports as well as profit and loss, cash flow analysis long term views and forward thinking. If this is the type of person you want on the board I would like your vote. I have served as your architectural committee chairman for the last two and a half years. If you have been happy with the way your applications have been handled I would appreciate your vote.

Also I would like to endorse Dennis Drury, Sandy Mass, and Paula Darragh for reelection.

Case 2021-761

Allegation #2

Exhibit #11

DAYTON VALLEY COMMUNITY ASSOCIATION

c/o Complete Association Management Company (CAMCO), 704 W Nye Ln Ste 101 Carson City, NV 89703

Exhibit #11
Pg 1

BOARD OF DIRECTORS MEETING MINUTES
JANUARY 27, 2021
101 Palmer Drive, Dayton, NV 89403
Per NRS116.31083, this meeting was audio recorded

BOARD OF DIRECTOR'S ROLL CALL

Name	Position	Term	Present	Absent
Dennis Drury	President	04/2021	X	
Sandy Mass	Vice President	04/2021	X	
Joseph Hughes	Treasurer	04/2021	X	
Amy Puzzo	Director	04/2021	X	
Paula Darragh	Director	04/2021	X	
Doug Kreie	Director	04/2021	X	

Manager: Julie Thompson, Community Association Manager.

ESTABLISHMENT OF QUORUM
Quorum was established with six of six members present

CALL TO ORDER
The Board asked Manager Julie Thompson to facilitate the meeting. Julie Thompson called the meeting to order at 6:09 PM.

MEMBERS COMMENTS
There were no member comments at this time.

MEETING MINUTES
The Board reviewed the October 28, 2020 meeting minutes.

MOTION: Paula Darragh made a motion to approve the meeting minutes as presented. Motion seconded by Doug Kreie. Motion carried.

FINANCIALS
The Board reviewed the current un-audited financial reports for the month ending November 2020.
The Association Treasurer, Joe Hughes, expressed his inability to fully audit the previous two years financials due to inability to access all historical data.

MOTION: Dennis Drury made a motion to acknowledge the unaudited financials as presented. Motion seconded by Doug Kreie. Motion carried.

OLD BUSINESS

A. Rules and Regulations Update – no update at this time.
B. Palmer gate update – CAM advised there were three (3) companies who were interested in supplying bids for the project. SNC, Silverstate and a third company. No proposals have been received as of today.

NEW BUSINESS

A. J. Hughes special project request -The CAM advised J. Hughes has requested documents regarding specific addresses with out clarification of scope. J. Hughes advised he is wanting the information regarding fence repair/installation. There could be a discrepancy between what the Association owns and what the homeowner owns. He wants to ensure no Association funds were spent on homeowner repairs. The Association attorney, Gayle Kern, advised the invoices regarding fence repair are appropriate to be provided as requested. The CAM will provide them as soon as possible.
B. Appointment of new Board Member – The homeowner revoked his request.

C. Immediate discontinuation of landscaping of the easement with the golf course - J. Hughes requested the immediate discontinuation of the landscaping of the easement areas with the golf course. The Board discussed why landscaping of the easements were taken over by the Association, due to homeowners complaining about the lack of maintenance being done and the areas being an eyesore.

MOTION: Amy Puzzo made a motion to stop the Association paid maintenance of the easement areas with the golf course effective immediately. Motion seconded by Joseph Hughes. Vote: Affirmative: Sandy Mass, Paula Darragh, Joseph Hughes and Amy Puzzo Negative: Dennis Drury and Doug Kreie. Motion carried.

D. Insurance review committee of 3 former qualified insurance agents to review Association policy – Joseph Hughes requested the forming of the committee to have the insurance coverages analyzed. Gayle Kern explained to the Board how a broker is different from an agent. The CAM asked the attorney if she would be able to write the Charter for the committee if formed. G. Kern agreed.

MOTION: Amy Puzzo made a motion to have the Association attorney draft the Charter to create the 3-member board of volunteer homeowners to be approved by the Board of Directors to analyze the insurance policy for the Association for appropriateness. Motion seconded by Joseph Hughes. Sandy Mass abstained from the vote as she works for an insurance company. Motion carried.

MOTION: Joseph Hughes made a motion to postpone any and all discussions of the remaining agenda items until the February Board of Directors meeting. Motion seconded by Doug Kreie. Motion carried.

NEXT MEETING DATE & ITEMS FOR NEXT MEETING

Next Meeting is scheduled for February 17, 2021 at 6:00 PM for the Budget Ratification.

MEMBER COMMENTS

Comments made were as follow:

- A homeowner requested the Association financials be uploaded to the Association website sooner.
- A homeowner requested clarification on the ownership of the pond behind her house.
- A homeowner is concerned about children riding their motorbikes on the paths and into the streets.

ADJOURNMENT

Doug Kreie moved to adjourn the meeting at 7:41 PM, Joseph Hughes seconded the motion. No further discussion, meeting adjourned.

Respectfully Submitted by: Julie Thompson, Community Manager
Agent for Complete Association Management Company

Approved: _____ Date: 18 FEB 2021
Secretary/Board Member Signature

Case 2021-761

Allegation #2

Exhibit #12

DAYTON VALLEY COMMNITY ASSOCIATION

Exhibit #12
Pg1

Candidacy Disclosure Statement

This form is provided for Homeowners who wish to run for the Board of Directors (you may nominate yourself). You must return this form to us no later than **March 24, 2021 by 5:00 PM.** The official meeting notice advising the exact date, time and location of the Election meeting will be mailed to all homeowners eligible to vote at a later date. There are seven (7) seats on the Board to fill.

NAME OF NOMINEE: ROGER ROCHA (I AM SELF NOMINATING)

ARE YOU A HOMEOWNER IN THE ASSOCIATION STATED ABOVE? _____ _____

YES NO

Per NRS 116.31034 (5) (a) and (b), please complete the following information regarding your candidacy. Please print your responses.

1.) Each person whose name is placed on the ballot as a candidate for a member of the executive Board must:

(a) Make a good faith effort to disclose any financial, business, professional or personal relationship or interest that would result or would appear to a reasonable person to result in a potential conflict of interest for the candidate if the candidate were to be elected to serve as a member of the executive board; and (Please respond to the statutory requirements cited above).

YES.

(b) disclose whether or not the candidate is a member in good standing for the purpose of this paragraph, a candidate shall not be deemed to be in "good standing" if the candidate has any unpaid or past due assessments or construction penalties that are required to be paid to the association. Please answer the question below by placing an X in the correct answer.

I am a member in "Good Standing" with the Association: Yes X **No** ___

2.) Experience: What skills do you feel you have that will contribute to the Board and Association? (Optional):

3.) Why do you want to serve on the Board? (Optional):

AS A RESIDENT I FEEL AN OBLIGATION TO BE INFORMED OF THE GUIDELINES WE MUST ALL ABIDE BY AND HOW OUR RESOURCES ARE MANAGED.

I reside in a unit with, am married to, domestic partners with, or am related by blood, adoption or marriage within the third degree of consanguinity or affinity to another person who is also a member of the executive board or is an officer of the association. ____ yes ____ no If yes, please explain on a separate sheet of paper).

Note: Nothing cited in this disclosure is intended to prevent a potential candidate from running for the board of directors. Further, the Board will not prohibit a candidate from appearing on the ballot for failure to provide a disclosure statement, or for providing an inaccurate one or one with content that is defamatory, libelous or profane. Should a candidate not complete a disclosure statement, or should it contain content believed to be defamatory, libelous or profane, the board will note the fact in a statement to be included with election-related mailings. Further, a complaint may be filed with the Real Estate Division against the candidate who does not comply with the disclosure requirement.

Nominee Signature (Required): _____

By signing this form I acknowledge that NRS 116.31034 requires a candidate to make all disclosures required by NRS 116.31034 in writing to the Association with his/her candidacy information, and that the disclosures must be distributed by the Association to each Member of the Association, with the ballot, in the manner established in the Bylaws of the Association, for that candidate to be eligible for office. By signing this form I agree to allow the Association to release any of the information I have supplied on this form.

Exhibit #12
Pg 2

CANDIDACY DISCLOSURE STATEMENT

(Please Print or Type)

Name ROGER ROCHA

Address 673 ST. ANDREWS DAYTON NV 89403
(Street) (City) (State) (Zip)

Are you a unit owner? ..... ☒ Yes ☐ No

(NOTE: NRS 116.31034(1) states: Except as otherwise provided in subsection 5 of NRS 116.212, not later than the termination of any period of declarant's control, the units' owners shall elect an executive board of at least three members, all of whom must be units' owners.)

NRS 116.31034 (9) (a) & (b) and NRS 116.31034 (10) (a) & (b) states the following:

9. Each person who is nominated as a candidate for membership on the executive board pursuant to subsection 4 must:
   (a) Make a good faith effort to disclose any financial, business, professional or personal relationship or interest that would result or would appear to a reasonable person to result in a potential conflict of interest for the candidate if the candidate were to be elected to serve as a member of the executive board; and
   (b) Disclose whether the candidate is a member in good standing. For the purposes of this paragraph, a candidate shall not be deemed to be in "good standing" if the candidate has any unpaid and past due assessments or construction penalties that are required to be paid to the association.
10. Except as otherwise provided in subsections 11 and 12, unless a person is appointed by the declarant:
   (a) A person may not be a candidate for or member of the executive board or an officer of the association if:
      (1) The person resides in a unit with, is married to, is domestic partners with, or is related by blood, adoption or marriage within the third degree of consanguinity or affinity to another person who is also a member of the executive board or is an officer of the association;
      (2) The person stands to gain any personal profit or compensation of any kind from a matter before the executive board of the association; or
      (3) The person, the person's spouse or the person's parent or child, by blood, marriage or adoption, performs the duties of a community manager for that association.

   (b) A person may not be a candidate for or member of the executive board of a master association or an officer of that master association if the person, the person's spouse or the person's parent or child, by blood, marriage or adoption, performs the duties of a community manager for:
      (1) That master association; or
      (2) Any association that is subject to the governing documents of that master association.

Please use the following lines to respond to the statutory requirements pursuant to NRS 116.31034 (9) (a)

Attach additional sheets, if necessary: _____

I am a candidate in good standing pursuant to NRS 116.31034(9) (b): ..... ☒ Yes ☐ No

If no, please explain: _____

Please indicate all that apply to your relation to any board members, officer(s) of the association or community managers:

I am:

- ☐ Residing within the same unit as a board member or officer.
- ☐ Married to a board member or officer.
- ☐ Domestic partners with a board member or officer.
- ☒ **None of the above**

Related to a board member by:

- ☐ Blood
- ☐ Adoption
- ☐ Marriage within the third degree of consanguinity
- ☐ Affinity to another person
- ☒ **None of the above**

The candidate must make all disclosures required pursuant to this subsection in writing to the association with his or her candidacy information. Except as otherwise provided in this subsection, the association shall distribute the disclosures, on behalf of the candidate, to each member of the association with the ballot or, in the event ballots are not prepared and mailed pursuant to subsection 5, in the next regular mailing of the association. The association is not obligated to distribute any disclosure pursuant to this subsection if the disclosure contains information that is believed to be defamatory, libelous or profane.

Any additional information provided by the candidate for the executive board is voluntary and is not a requirement under NRS 116.31034.

Signature of candidate _____ *Date* 5/26/2021

Revised 7/18/19

CICC0218

Exhibit #12
Pg 3

ROGER ROCHA
NO STATEMENT
SUBMITTED

Case 2021-761

Allegation #2

Exhibit #13

9874888-595-3-4

DAYTON VALLEY COMMNITY ASSOCIATION

Exhibit #13
Pg 1

Candidacy Disclosure Statement

s form is provided for Homeowners who wish to run for the Board of Directors (you may nominate yourself). You must return this form to us no later than **March 24, 2021 by 5:00 PM.** The official meeting notice advising the exact date, time and location of the Election meeting will be mailed to all homeowners eligible to vote at a later date. There are seven **(7)** seats on the Board to fill.

NAME OF NOMINEE: Steve Simon.

ARE YOU A HOMEOWNER IN THE ASSOCIATION STATED ABOVE? (YES) NO

Per NRS 116.31034 (5) (a) and (b), please complete the following information regarding your candidacy. Please print your responses.

1.) Each person whose name is placed on the ballot as a candidate for a member of the executive Board must:

(a) Make a good faith effort to disclose any financial, business, professional or personal relationship or interest that would result or would appear to a reasonable person to result in a potential conflict of interest for the candidate if the candidate were to be elected to serve as a member of the executive board; and (Please respond to the statutory requirements cited above).

none

(b) disclose whether or not the candidate is a member in good standing for the purpose of this paragraph, a candidate shall not be deemed to be in "good standing" if the candidate has any unpaid or past due assessments or construction penalties that are required to be paid to the association. Please answer the question below by placing an X in the correct answer.

I am a member in "Good Standing" with the Association: Yes X No ___

2.) Experience: What skills do you feel you have that will contribute to the Board and Association? (Optional):

Ex Small business owner

3.) Why do you want to serve on the Board? (Optional):

Concerned home owner

I reside in a unit with, am married to, domestic partners with, or am related by blood, adoption or marriage within the third degree of consanguinity or affinity to another person who is also a member of the executive board or is an officer of the association. ___ yes X no If yes, please explain on a separate sheet of paper).

Note: Nothing cited in this disclosure is intended to prevent a potential candidate from running for the board of directors. Further, the Board will not prohibit a candidate from appearing on the ballot for failure to provide a disclosure statement, or for providing an inaccurate one or one with content that is defamatory, libelous or profane. Should a candidate not complete a disclosure statement, or should it contain content believed to be defamatory, libelous or profane, the board will note the fact in a statement to be included with election-related mailings. Further, a complaint may be filed with the Real Estate Division against the candidate who does not comply with the disclosure requirement.

Nominee Signature (Required): _____

By signing this form I acknowledge that NRS 116.31034 requires a candidate to make all disclosures required by NRS 116.31034 in writing to the Association with his/her candidacy information, and that the disclosures must be distributed by the Association to each Member of the Association, with the ballot, in the manner established in the Bylaws of the Association, for that candidate to be eligible for office. By signing this form I agree to allow the Association to release any of the information I have supplied on this form.

9874888 8759FCMP-2

CICC0221

Exhibit #13
Pg 2

STEVE SIMONI MISSING CANDIDATE DISCLOSURE PAGE

Exhibit #13
Pg 3

STEVE SIMONI
NO STATEMENT
SUBMITTED

Case 2021-761

Allegation #2

Exhibit #14

DAYTON VALLEY COMMNITY ASSOCIATION

Exhibit # 14
Pg 1

Candidacy Disclosure Statement

This form is provided for Homeowners who wish to run for the Board of Directors (you may nominate yourself). You must return this form to us no later than **March 24, 2021 by 5:00 PM.** The official meeting notice advising the exact date, time and location of the Election meeting will be mailed to all homeowners eligible to vote at a later date. There are seven **(7)** seats on the Board to fill.

NAME OF NOMINEE: Rich Wilde

ARE YOU A HOMEOWNER IN THE ASSOCIATION STATED ABOVE? _____ _____

(YES) NO

Per NRS 116.31034 (5) (a) and (b), please complete the following information regarding your candidacy. Please print your responses.

1.) Each person whose name is placed on the ballot as a candidate for a member of the executive Board must:

(a) Make a good faith effort to disclose any financial, business, professional or personal relationship or interest that would result or would appear to a reasonable person to result in a potential conflict of interest for the candidate if the candidate were to be elected to serve as a member of the executive board; and (Please respond to the statutory requirements cited above).

(b) disclose whether or not the candidate is a member in good standing for the purpose of this paragraph, a candidate shall not be deemed to be in "good standing" if the candidate has any unpaid or past due assessments or construction penalties that are required to be paid to the association. Please answer the question below by placing an X in the correct answer.

I am a member in "Good Standing" with the Association: Yes ✓ **No** ___

2.) Experience: What skills do you feel you have that will contribute to the Board and Association? (Optional):

Business Management with Large and Small Corporations

3.) Why do you want to serve on the Board? (Optional):

I reside in a unit with, am married to, domestic partners with, or am related by blood, adoption or marriage within the third degree of consanguinity or affinity to another person who is also a member of the executive board or is an officer of the association. ____ yes ____ no If yes, please explain on a separate sheet of paper).

Note: Nothing cited in this disclosure is intended to prevent a potential candidate from running for the board of directors. Further, the Board will not prohibit a candidate from appearing on the ballot for failure to provide a disclosure statement, or for providing an inaccurate one or one with content that is defamatory, libelous or profane. Should a candidate not complete a disclosure statement, or should it contain content believed to be defamatory, libelous or profane, the board will note the fact in a statement to be included with election-related mailings. Further, a complaint may be filed with the Real Estate Division against the candidate who does not comply with the disclosure requirement.

Nominee Signature (Required): _____

By signing this form I acknowledge that NRS 116.31034 requires a candidate to make all disclosures required by NRS 116.31034 in writing to the Association with his/her candidacy information, and that the disclosures must be distributed by the Association to each Member of the Association, with the ballot, in the manner established in the Bylaws of the Association, for that candidate to be eligible for office. By signing this form I agree to allow the Association to release any of the information I have supplied on this form.

CANDIDACY DISCLOSURE STATEMENT

(Please Print or Type)

Exhibit #14 Pg 2

Name Richard Wilde

Address 448 La Costa Circle (Street) Dayton (City) NV (State) 89403 (Zip)

Are you a unit owner? ..... ☒ Yes ☐ No

(NOTE: NRS 116.31034(1) states: Except as otherwise provided in subsection 5 of NRS 116.212, not later than the termination of any period of declarant's control, the units' owners shall elect an executive board of at least three members, all of whom must be units' owners.)

NRS 116.31034 (9) (a) & (b) and NRS 116.31034 (10) (a) & (b) states the following:

9. Each person who is nominated as a candidate for membership on the executive board pursuant to subsection 4 must:
   (a) Make a good faith effort to disclose any financial, business, professional or personal relationship or interest that would result or would appear to a reasonable person to result in a potential conflict of interest for the candidate if the candidate were to be elected to serve as a member of the executive board; and
   (b) Disclose whether the candidate is a member in good standing. For the purposes of this paragraph, a candidate shall not be deemed to be in "good standing" if the candidate has any unpaid and past due assessments or construction penalties that are required to be paid to the association.
10. Except as otherwise provided in subsections 11 and 12, unless a person is appointed by the declarant:
   (a) A person may not be a candidate for or member of the executive board or an officer of the association if:
      (1) The person resides in a unit with, is married to, is domestic partners with, or is related by blood, adoption or marriage within the third degree of consanguinity or affinity to another person who is also a member of the executive board or is an officer of the association;
      (2) The person stands to gain any personal profit or compensation of any kind from a matter before the executive board of the association; or
      (3) The person, the person's spouse or the person's parent or child, by blood, marriage or adoption, performs the duties of a community manager for that association.

   (b) A person may not be a candidate for or member of the executive board of a master association or an officer of that master association if the person, the person's spouse or the person's parent or child, by blood, marriage or adoption, performs the duties of a community manager for:
      (1) That master association; or
      (2) Any association that is subject to the governing documents of that master association.

Please use the following lines to respond to the statutory requirements pursuant to NRS 116.31034 (9) (a)

***Attach additional sheets, if necessary*:** _____

I am a candidate in good standing pursuant to NRS 116.31034(9) (b): ..... ☒ Yes ☐ No

If no, please explain: _____

Please indicate all that apply to your relation to any board members, officer(s) of the association or community managers:

I am:

- ☐ Residing within the same unit as a board member or officer.
- ☐ Married to a board member or officer.
- ☐ Domestic partners with a board member or officer.
- ☒ **None of the above**

Related to a board member by:

- ☐ Blood
- ☐ Adoption
- ☐ Marriage within the third degree of consanguinity
- ☐ Affinity to another person
- ☒ **None of the above**

The candidate must make all disclosures required pursuant to this subsection in writing to the association with his or her candidacy information. Except as otherwise provided in this subsection, the association shall distribute the disclosures, on behalf of the candidate, to each member of the association with the ballot or, in the event ballots are not prepared and mailed pursuant to subsection 5, in the next regular mailing of the association. The association is not obligated to distribute any disclosure pursuant to this subsection if the disclosure contains information that is believed to be defamatory, libelous or profane.

Any additional information provided by the candidate for the executive board is voluntary and is not a requirement under NRS 116.31034.

Richard Wilde
Signature of candidate

Date May 28, 2021

Exhibit #14
Pg 3

RICH WILDE
NO STATEMENT
SUBMITTED

Case 2021-761

Allegation #2

Exhibit #8

Exhibit #8
Pg1

ENTITY INFORMATION

ENTITY INFORMATION

Entity Name:

RELIANCE GOLF MANAGEMENT, L.L.C.

Entity Number:

E0187062017-3

Entity Type:

Domestic Limited-Liability Company (86)

Entity Status:

Active

Formation Date:

04/19/2017

NV Business ID:

NV20171253159

Termination Date:

Perpetual

Annual Report Due Date:

4/30/2022

Series LLC:

☐

Restricted LLC:

☐

REGISTERED AGENT INFORMATION

Name of Individual or Legal Entity:

JAMES H. KEPLER, SR CEO

Exhibit #8
Pg 2

Status:

Active

CRA Agent Entity Type:

Registered Agent Type:

Non-Commercial Registered Agent

NV Business ID:

Office or Position:

Jurisdiction:

Street Address:

681 ST ANDREWS DRIVE, DAYTON, NV, 89403, USA

Mailing Address:

Individual with Authority to Act:

Fictitious Website or Domain Name:

OFFICER INFORMATION

☐ **VIEW HISTORICAL DATA**

Title	Name	Address	Last Updated	Status
Manager	JAMES H KEPLER	681 ST. ANDREW DR, DAYTON, NV, 89403, USA	02/01/2019	Active
Manager	DAVID E KEPLER II	681 ST. ANDREW DR, DAYTON, NV, 89403, USA	02/01/2019	Active

Page 1 of 1, records 1 to 2 of 2

Filing History Name History Mergers/Conversions

Return to Search Return to Results

Exhibit #8
Pg 3

CICC0231

Case 2021-761

Allegation #2

Exhibit #9

Exhibit #9
Pg1

ENTITY INFORMATION

ENTITY INFORMATION

Entity Name:

FRIENDS OF DAYTON VALLEY COMMUNITY, LLC

Entity Number:

E9169822020-8

Entity Type:

Domestic Limited-Liability Company (86)

Entity Status:

Active

Formation Date:

09/17/2020

NV Business ID:

NV20201894390

Termination Date:

Perpetual

Annual Report Due Date:

9/30/2021

Series LLC:

☐

Restricted LLC:

☑

REGISTERED AGENT INFORMATION

CICC0233

Name of Individual or Legal Entity:

ALLISON MACKENZIE, LTD.

Exhibit # 9
Pg 2

Status:

Active

CRA Agent Entity Type:

Registered Agent Type:

Commercial Registered Agent

NV Business ID:

Office or Position:

Jurisdiction:

NEVADA

Street Address:

402 NORTH DIVISION STREET, Carson City, NV, 89703, USA

Mailing Address:

Individual with Authority to Act:

MIKE PAVLAKIS

Fictitious Website or Domain Name:

OFFICER INFORMATION

☐ **VIEW HISTORICAL DATA**

Title	Name	Address	Last Updated	Status
Manager	James Kepler	681 St. Andrews, Dayton, NV, 89403, USA	09/17/2020	Active

Page 1 of 1, records 1 to 1 of 1

Filing History Name History Mergers/Conversions

Return to Search Return to Results

Exhibit # 9
Pg 3

Case 2021-761

Allegation #2

Exhibit #10

9874888-14-3-4

DAYTON VALLEY COMMNITY ASSOCIATION

Exhibit #10
Pg 1

Candidacy Disclosure Statement

s form is provided for Homeowners who wish to run for the Board of Directors (you may nominate yourself). You must return this form to us no later than **March 24, 2021 by 5:00 PM.** The official meeting notice advising the exact date, time and location of the Election meeting will be mailed to all homeowners eligible to vote at a later date. There are seven (7) seats on the Board to fill.

NAME OF NOMINEE: DOUG KREIE

ARE YOU A HOMEOWNER IN THE ASSOCIATION STATED ABOVE? _____ _____

(YES) NO

Per NRS 116.31034 (5) (a) and (b), please complete the following information regarding your candidacy. Please print your responses.

1.) Each person whose name is placed on the ballot as a candidate for a member of the executive Board must:

(a) Make a good faith effort to disclose any financial, business, professional or personal relationship or interest that would result or would appear to a reasonable person to result in a potential conflict of interest for the candidate if the candidate were to be elected to serve as a member of the executive board; and (Please respond to the statutory requirements cited above).

(b) disclose whether or not the candidate is a member in good standing for the purpose of this paragraph, a candidate shall not be deemed to be in "good standing" if the candidate has any unpaid or past due assessments or construction penalties that are required to be paid to the association. Please answer the question below by placing an X in the correct answer.

I am a member in "Good Standing" with the Association: Yes X **No** ___

2.) Experience: What skills do you feel you have that will contribute to the Board and Association? (Optional):

Self EMPLOYed FOR 30 YEARS DEALING IN ALL ASPECTS OF BUSINESS

3.) Why do you want to serve on the Board? (Optional):

I HAVE BEEN ON THE BOARD for 2 YEARS AS ARCHITECURAN COMMITTE CHAIRMAN & WOULD LIKE TO CONTINUE.

I reside in a unit with, am married to, domestic partners with, or am related by blood, adoption or marriage within the third degree of consanguinity or affinity to another person who is also a member of the executive board or is an officer of the association. ____ yes ____ no If yes, please explain on a separate sheet of paper).

Note: Nothing cited in this disclosure is intended to prevent a potential candidate from running for the board of directors. Further, the Board will not prohibit a candidate from appearing on the ballot for failure to provide a disclosure statement, or for providing an inaccurate one or one with content that is defamatory, libelous or profane. Should a candidate not complete a disclosure statement, or should it contain content believed to be defamatory, libelous or profane, the board will note the fact in a statement to be included with election-related mailings. Further, a complaint may be filed with the Real Estate Division against the candidate who does not comply with the disclosure requirement.

Nominee Signature (Required): D. Kreie

By signing this form I acknowledge that NRS 116.31034 requires a candidate to make all disclosures required by NRS 116.31034 in writing to the Association with his/her candidacy information, and that the disclosures must be distributed by the Association to each Member of the Association, with the ballot, in the manner established in the Bylaws of the Association, for that candidate to be eligible for office. By signing this form I agree to allow the Association to release any of the information I have supplied on this form.

9874888 8759FCMP-2

Exhibit #10
Pg 2

CANDIDACY DISCLOSURE STATEMENT

(Please Print or Type)

Name DOUG KREIE

Address 144 SAWGRASS LN DAYTON NV. 89403
(Street) (City) (State) (Zip)

Are you a unit owner? ..... ☒ Yes ☐ No

(NOTE: NRS 116.31034(1) states: Except as otherwise provided in subsection 5 of NRS 116.212, not later than the termination of any period of declarant's control, the units' owners shall elect an executive board of at least three members, all of whom must be units' owners.)

NRS 116.31034 (9) (a) & (b) and NRS 116.31034 (10) (a) & (b) states the following:

9. Each person who is nominated as a candidate for membership on the executive board pursuant to subsection 4 must:
   (a) Make a good faith effort to disclose any financial, business, professional or personal relationship or interest that would result or would appear to a reasonable person to result in a potential conflict of interest for the candidate if the candidate were to be elected to serve as a member of the executive board; and
   (b) Disclose whether the candidate is a member in good standing. For the purposes of this paragraph, a candidate shall not be deemed to be in "good standing" if the candidate has any unpaid and past due assessments or construction penalties that are required to be paid to the association.
10. Except as otherwise provided in subsections 11 and 12, unless a person is appointed by the declarant:
   (a) A person may not be a candidate for or member of the executive board or an officer of the association if:
      (1) The person resides in a unit with, is married to, is domestic partners with, or is related by blood, adoption or marriage within the third degree of consanguinity or affinity to another person who is also a member of the executive board or is an officer of the association;
      (2) The person stands to gain any personal profit or compensation of any kind from a matter before the executive board of the association; or
      (3) The person, the person's spouse or the person's parent or child, by blood, marriage or adoption, performs the duties of a community manager for that association.

   (b) A person may not be a candidate for or member of the executive board of a master association or an officer of that master association if the person, the person's spouse or the person's parent or child, by blood, marriage or adoption, performs the duties of a community manager for:
      (1) That master association; or
      (2) Any association that is subject to the governing documents of that master association.

Please use the following lines to respond to the statutory requirements pursuant to NRS 116.31034 (9) (a)

Attach additional sheets, if necessary: I AM A MINORITY STOCKHOLDER IN TOUR SPECS

I am a candidate in good standing pursuant to NRS 116.31034(9) (b): ..... ☒ Yes ☐ No

If no, please explain: _____

Please indicate all that apply to your relation to any board members, officer(s) of the association or community managers:

I am:
- ☐ Residing within the same unit as a board member or officer.
- ☐ Married to a board member or officer.
- ☐ Domestic partners with a board member or officer.
- ☒ **None of the above**

Related to a board member by:
- ☐ Blood
- ☐ Adoption
- ☐ Marriage within the third degree of consanguinity
- ☐ Affinity to another person
- ☒ **None of the above**

The candidate must make all disclosures required pursuant to this subsection in writing to the association with his or her candidacy information. Except as otherwise provided in this subsection, the association shall distribute the disclosures, on behalf of the candidate, to each member of the association with the ballot or, in the event ballots are not prepared and mailed pursuant to subsection 5, in the next regular mailing of the association. The association is not obligated to distribute any disclosure pursuant to this subsection if the disclosure contains information that is believed to be defamatory, libelous or profane.

Any additional information provided by the candidate for the executive board is voluntary and is not a requirement under NRS 116.31034.

Signature of candidate _____ *Date* 6-2-2021

Exhibit #10
Pg 3

My name is Doug Kreie and I am running for reelection to the Board of Directors of the Dayton Valley Home Owners Association

I have 30 years' experience as a business owner. I have worked with financials and expense reports as well as profit and loss, cash flow analysis long term views and forward thinking. If this is the type of person you want on the board I would like your vote. I have served as your architectural committee chairman for the last two and a half years. If you have been happy with the way your applications have been handled I would appreciate your vote.

Also I would like to endorse Dennis Drury, Sandy Mass, and Paula Darragh for reelection.

Case 2021-761

Allegation #2

Exhibit #11

DAYTON VALLEY COMMUNITY ASSOCIATION

c/o Complete Association Management Company (CAMCO), 704 W Nye Ln Ste 101 Carson City, NV 89703

Exhibit #11
Pg 1

BOARD OF DIRECTORS MEETING MINUTES
JANUARY 27, 2021
101 Palmer Drive, Dayton, NV 89403
Per NRS116.31083, this meeting was audio recorded

BOARD OF DIRECTOR'S ROLL CALL

Name	Position	Term	Present	Absent
Dennis Drury	President	04/2021	X	
Sandy Mass	Vice President	04/2021	X	
Joseph Hughes	Treasurer	04/2021	X	
Amy Puzzo	Director	04/2021	X	
Paula Darragh	Director	04/2021	X	
Doug Kreie	Director	04/2021	X	

Manager: Julie Thompson, Community Association Manager.

ESTABLISHMENT OF QUORUM
Quorum was established with six of six members present

CALL TO ORDER
The Board asked Manager Julie Thompson to facilitate the meeting. Julie Thompson called the meeting to order at 6:09 PM.

MEMBERS COMMENTS
There were no member comments at this time.

MEETING MINUTES
The Board reviewed the October 28, 2020 meeting minutes.

MOTION: Paula Darragh made a motion to approve the meeting minutes as presented. Motion seconded by Doug Kreie. Motion carried.

FINANCIALS
The Board reviewed the current un-audited financial reports for the month ending November 2020.
The Association Treasurer, Joe Hughes, expressed his inability to fully audit the previous two years financials due to inability to access all historical data.

MOTION: Dennis Drury made a motion to acknowledge the unaudited financials as presented. Motion seconded by Doug Kreie. Motion carried.

OLD BUSINESS

A. Rules and Regulations Update – no update at this time.
B. Palmer gate update – CAM advised there were three (3) companies who were interested in supplying bids for the project. SNC, Silverstate and a third company. No proposals have been received as of today.

NEW BUSINESS

A. J. Hughes special project request -The CAM advised J. Hughes has requested documents regarding specific addresses with out clarification of scope. J. Hughes advised he is wanting the information regarding fence repair/installation. There could be a discrepancy between what the Association owns and what the homeowner owns. He wants to ensure no Association funds were spent on homeowner repairs. The Association attorney, Gayle Kern, advised the invoices regarding fence repair are appropriate to be provided as requested. The CAM will provide them as soon as possible.
B. Appointment of new Board Member – The homeowner revoked his request.

C. Immediate discontinuation of landscaping of the easement with the golf course - J. Hughes requested the immediate discontinuation of the landscaping of the easement areas with the golf course. The Board discussed why landscaping of the easements were taken over by the Association, due to homeowners complaining about the lack of maintenance being done and the areas being an eyesore.

MOTION: Amy Puzzo made a motion to stop the Association paid maintenance of the easement areas with the golf course effective immediately. Motion seconded by Joseph Hughes. Vote: Affirmative: Sandy Mass, Paula Darragh, Joseph Hughes and Amy Puzzo Negative: Dennis Drury and Doug Kreie. Motion carried.

D. Insurance review committee of 3 former qualified insurance agents to review Association policy – Joseph Hughes requested the forming of the committee to have the insurance coverages analyzed. Gayle Kern explained to the Board how a broker is different from an agent. The CAM asked the attorney if she would be able to write the Charter for the committee if formed. G. Kern agreed.

MOTION: Amy Puzzo made a motion to have the Association attorney draft the Charter to create the 3-member board of volunteer homeowners to be approved by the Board of Directors to analyze the insurance policy for the Association for appropriateness. Motion seconded by Joseph Hughes. Sandy Mass abstained from the vote as she works for an insurance company. Motion carried.

MOTION: Joseph Hughes made a motion to postpone any and all discussions of the remaining agenda items until the February Board of Directors meeting. Motion seconded by Doug Kreie. Motion carried.

NEXT MEETING DATE & ITEMS FOR NEXT MEETING

Next Meeting is scheduled for February 17, 2021 at 6:00 PM for the Budget Ratification.

MEMBER COMMENTS

Comments made were as follow:

- A homeowner requested the Association financials be uploaded to the Association website sooner.
- A homeowner requested clarification on the ownership of the pond behind her house.
- A homeowner is concerned about children riding their motorbikes on the paths and into the streets.

ADJOURNMENT

Doug Kreie moved to adjourn the meeting at 7:41 PM, Joseph Hughes seconded the motion. No further discussion, meeting adjourned.

Respectfully Submitted by: Julie Thompson, Community Manager
Agent for Complete Association Management Company

Approved: _____ Date: 18 FEB 2021
Secretary/Board Member Signature

Case 2021-761

Allegation #2

Exhibit #12

DAYTON VALLEY COMMNITY ASSOCIATION

Exhibit #12
Pg1

Candidacy Disclosure Statement

This form is provided for Homeowners who wish to run for the Board of Directors (you may nominate yourself). You must return this form to us no later than **March 24, 2021 by 5:00 PM.** The official meeting notice advising the exact date, time and location of the Election meeting will be mailed to all homeowners eligible to vote at a later date. There are seven (7) seats on the Board to fill.

NAME OF NOMINEE: ROGER ROCHA (I AM SELF NOMINATING)

ARE YOU A HOMEOWNER IN THE ASSOCIATION STATED ABOVE? _____ _____

YES NO

Per NRS 116.31034 (5) (a) and (b), please complete the following information regarding your candidacy. Please print your responses.

1.) Each person whose name is placed on the ballot as a candidate for a member of the executive Board must:

(a) Make a good faith effort to disclose any financial, business, professional or personal relationship or interest that would result or would appear to a reasonable person to result in a potential conflict of interest for the candidate if the candidate were to be elected to serve as a member of the executive board; and (Please respond to the statutory requirements cited above).

YES.

(b) disclose whether or not the candidate is a member in good standing for the purpose of this paragraph, a candidate shall not be deemed to be in "good standing" if the candidate has any unpaid or past due assessments or construction penalties that are required to be paid to the association. Please answer the question below by placing an X in the correct answer.

I am a member in "Good Standing" with the Association: Yes X **No** ___

2.) Experience: What skills do you feel you have that will contribute to the Board and Association? (Optional):

3.) Why do you want to serve on the Board? (Optional):

AS A RESIDENT I FEEL AN OBLIGATION TO BE INFORMED OF THE GUIDELINES WE MUST ALL ABIDE BY AND HOW OUR RESOURCES ARE MANAGED.

I reside in a unit with, am married to, domestic partners with, or am related by blood, adoption or marriage within the third degree of consanguinity or affinity to another person who is also a member of the executive board or is an officer of the association. ____ yes ____ no If yes, please explain on a separate sheet of paper).

Note: Nothing cited in this disclosure is intended to prevent a potential candidate from running for the board of directors. Further, the Board will not prohibit a candidate from appearing on the ballot for failure to provide a disclosure statement, or for providing an inaccurate one or one with content that is defamatory, libelous or profane. Should a candidate not complete a disclosure statement, or should it contain content believed to be defamatory, libelous or profane, the board will note the fact in a statement to be included with election-related mailings. Further, a complaint may be filed with the Real Estate Division against the candidate who does not comply with the disclosure requirement.

Nominee Signature (Required): _____

By signing this form I acknowledge that NRS 116.31034 requires a candidate to make all disclosures required by NRS 116.31034 in writing to the Association with his/her candidacy information, and that the disclosures must be distributed by the Association to each Member of the Association, with the ballot, in the manner established in the Bylaws of the Association, for that candidate to be eligible for office. By signing this form I agree to allow the Association to release any of the information I have supplied on this form.

Exhibit #12
Pg 2

CANDIDACY DISCLOSURE STATEMENT

(Please Print or Type)

Name ROGER ROCHA

Address 673 ST. ANDREWS DAYTON NV 89403
(Street) (City) (State) (Zip)

Are you a unit owner? ..... ☒ Yes ☐ No

(NOTE: NRS 116.31034(1) states: Except as otherwise provided in subsection 5 of NRS 116.212, not later than the termination of any period of declarant's control, the units' owners shall elect an executive board of at least three members, all of whom must be units' owners.)

NRS 116.31034 (9) (a) & (b) and NRS 116.31034 (10) (a) & (b) states the following:

9. Each person who is nominated as a candidate for membership on the executive board pursuant to subsection 4 must:
   (a) Make a good faith effort to disclose any financial, business, professional or personal relationship or interest that would result or would appear to a reasonable person to result in a potential conflict of interest for the candidate if the candidate were to be elected to serve as a member of the executive board; and
   (b) Disclose whether the candidate is a member in good standing. For the purposes of this paragraph, a candidate shall not be deemed to be in "good standing" if the candidate has any unpaid and past due assessments or construction penalties that are required to be paid to the association.
10. Except as otherwise provided in subsections 11 and 12, unless a person is appointed by the declarant:
   (a) A person may not be a candidate for or member of the executive board or an officer of the association if:
      (1) The person resides in a unit with, is married to, is domestic partners with, or is related by blood, adoption or marriage within the third degree of consanguinity or affinity to another person who is also a member of the executive board or is an officer of the association;
      (2) The person stands to gain any personal profit or compensation of any kind from a matter before the executive board of the association; or
      (3) The person, the person's spouse or the person's parent or child, by blood, marriage or adoption, performs the duties of a community manager for that association.

   (b) A person may not be a candidate for or member of the executive board of a master association or an officer of that master association if the person, the person's spouse or the person's parent or child, by blood, marriage or adoption, performs the duties of a community manager for:
      (1) That master association; or
      (2) Any association that is subject to the governing documents of that master association.

Please use the following lines to respond to the statutory requirements pursuant to NRS 116.31034 (9) (a)

Attach additional sheets, if necessary: _____

I am a candidate in good standing pursuant to NRS 116.31034(9) (b): ..... ☒ Yes ☐ No

If no, please explain: _____

Please indicate all that apply to your relation to any board members, officer(s) of the association or community managers:

I am:

- ☐ Residing within the same unit as a board member or officer.
- ☐ Married to a board member or officer.
- ☐ Domestic partners with a board member or officer.
- ☒ **None of the above**

Related to a board member by:

- ☐ Blood
- ☐ Adoption
- ☐ Marriage within the third degree of consanguinity
- ☐ Affinity to another person
- ☒ **None of the above**

The candidate must make all disclosures required pursuant to this subsection in writing to the association with his or her candidacy information. Except as otherwise provided in this subsection, the association shall distribute the disclosures, on behalf of the candidate, to each member of the association with the ballot or, in the event ballots are not prepared and mailed pursuant to subsection 5, in the next regular mailing of the association. The association is not obligated to distribute any disclosure pursuant to this subsection if the disclosure contains information that is believed to be defamatory, libelous or profane.

Any additional information provided by the candidate for the executive board is voluntary and is not a requirement under NRS 116.31034.

Signature of candidate _____ *Date* 5/26/2021

Revised 7/18/19

850

CICC0245

Exhibit #12
Pg 3

ROGER ROCHA
NO STATEMENT
SUBMITTED

Case 2021-761

Allegation #2

Exhibit #13

9874888-595-3-4

DAYTON VALLEY COMMNITY ASSOCIATION

Exhibit #13
Pg 1

Candidacy Disclosure Statement

s form is provided for Homeowners who wish to run for the Board of Directors (you may nominate yourself). You must return this form to us no later than **March 24, 2021 by 5:00 PM.** The official meeting notice advising the exact date, time and location of the Election meeting will be mailed to all homeowners eligible to vote at a later date. There are seven (7) seats on the Board to fill.

NAME OF NOMINEE: Steve Simon.

ARE YOU A HOMEOWNER IN THE ASSOCIATION STATED ABOVE? (YES) NO

Per NRS 116.31034 (5) (a) and (b), please complete the following information regarding your candidacy. Please print your responses.

1.) Each person whose name is placed on the ballot as a candidate for a member of the executive Board must:

(a) Make a good faith effort to disclose any financial, business, professional or personal relationship or interest that would result or would appear to a reasonable person to result in a potential conflict of interest for the candidate if the candidate were to be elected to serve as a member of the executive board; and (Please respond to the statutory requirements cited above).

none

(b) disclose whether or not the candidate is a member in good standing for the purpose of this paragraph, a candidate shall not be deemed to be in "good standing" if the candidate has any unpaid or past due assessments or construction penalties that are required to be paid to the association. Please answer the question below by placing an X in the correct answer.

I am a member in "Good Standing" with the Association: Yes X No ___

2.) Experience: What skills do you feel you have that will contribute to the Board and Association? (Optional):

Ex Small business owner

3.) Why do you want to serve on the Board? (Optional):

Concerned home owner

I reside in a unit with, am married to, domestic partners with, or am related by blood, adoption or marriage within the third degree of consanguinity or affinity to another person who is also a member of the executive board or is an officer of the association. ___ yes X no If yes, please explain on a separate sheet of paper).

Note: Nothing cited in this disclosure is intended to prevent a potential candidate from running for the board of directors. Further, the Board will not prohibit a candidate from appearing on the ballot for failure to provide a disclosure statement, or for providing an inaccurate one or one with content that is defamatory, libelous or profane. Should a candidate not complete a disclosure statement, or should it contain content believed to be defamatory, libelous or profane, the board will note the fact in a statement to be included with election-related mailings. Further, a complaint may be filed with the Real Estate Division against the candidate who does not comply with the disclosure requirement.

Nominee Signature (Required): _____

By signing this form I acknowledge that NRS 116.31034 requires a candidate to make all disclosures required by NRS 116.31034 in writing to the Association with his/her candidacy information, and that the disclosures must be distributed by the Association to each Member of the Association, with the ballot, in the manner established in the Bylaws of the Association, for that candidate to be eligible for office. By signing this form I agree to allow the Association to release any of the information I have supplied on this form.

9874888 8759FCMP-2

CICC0248

Exhibit #13
Pg 2

STEVE SIMONI
MISSING
CANDIDATE
DISCLOSURE
PAGE

Exhibit #13
Pg 3

STEVE SIMONI
NO STATEMENT
SUBMITTED

Case 2021-761

Allegation #2

Exhibit #14

DAYTON VALLEY COMMNITY ASSOCIATION

Exhibit # 14
Pg 1

Candidacy Disclosure Statement

This form is provided for Homeowners who wish to run for the Board of Directors (you may nominate yourself). You must return this form to us no later than **March 24, 2021 by 5:00 PM.** The official meeting notice advising the exact date, time and location of the Election meeting will be mailed to all homeowners eligible to vote at a later date. There are seven **(7)** seats on the Board to fill.

NAME OF NOMINEE: Rich Wilde

ARE YOU A HOMEOWNER IN THE ASSOCIATION STATED ABOVE? _____ _____

(YES) NO

Per NRS 116.31034 (5) (a) and (b), please complete the following information regarding your candidacy. Please print your responses.

1.) Each person whose name is placed on the ballot as a candidate for a member of the executive Board must:

(a) Make a good faith effort to disclose any financial, business, professional or personal relationship or interest that would result or would appear to a reasonable person to result in a potential conflict of interest for the candidate if the candidate were to be elected to serve as a member of the executive board; and (Please respond to the statutory requirements cited above).

(b) disclose whether or not the candidate is a member in good standing for the purpose of this paragraph, a candidate shall not be deemed to be in "good standing" if the candidate has any unpaid or past due assessments or construction penalties that are required to be paid to the association. Please answer the question below by placing an X in the correct answer.

I am a member in "Good Standing" with the Association: Yes ✓ **No** ___

2.) Experience: What skills do you feel you have that will contribute to the Board and Association? (Optional):

Business Management with Large and Small Corporations

3.) Why do you want to serve on the Board? (Optional):

I reside in a unit with, am married to, domestic partners with, or am related by blood, adoption or marriage within the third degree of consanguinity or affinity to another person who is also a member of the executive board or is an officer of the association. ____ yes ____ no If yes, please explain on a separate sheet of paper).

Note: Nothing cited in this disclosure is intended to prevent a potential candidate from running for the board of directors. Further, the Board will not prohibit a candidate from appearing on the ballot for failure to provide a disclosure statement, or for providing an inaccurate one or one with content that is defamatory, libelous or profane. Should a candidate not complete a disclosure statement, or should it contain content believed to be defamatory, libelous or profane, the board will note the fact in a statement to be included with election-related mailings. Further, a complaint may be filed with the Real Estate Division against the candidate who does not comply with the disclosure requirement.

Nominee Signature (Required): _____

By signing this form I acknowledge that NRS 116.31034 requires a candidate to make all disclosures required by NRS 116.31034 in writing to the Association with his/her candidacy information, and that the disclosures must be distributed by the Association to each Member of the Association, with the ballot, in the manner established in the Bylaws of the Association, for that candidate to be eligible for office. By signing this form I agree to allow the Association to release any of the information I have supplied on this form.

CANDIDACY DISCLOSURE STATEMENT

(Please Print or Type)

Exhibit #14 Pg 2

Name Richard Wilde

Address 448 La Costa Circle (Street) Dayton (City) NV (State) 89403 (Zip)

Are you a unit owner? ..... ☒ Yes ☐ No

(NOTE: NRS 116.31034(1) states: Except as otherwise provided in subsection 5 of NRS 116.212, not later than the termination of any period of declarant's control, the units' owners shall elect an executive board of at least three members, all of whom must be units' owners.)

NRS 116.31034 (9) (a) & (b) and NRS 116.31034 (10) (a) & (b) states the following:

9. Each person who is nominated as a candidate for membership on the executive board pursuant to subsection 4 must:
   (a) Make a good faith effort to disclose any financial, business, professional or personal relationship or interest that would result or would appear to a reasonable person to result in a potential conflict of interest for the candidate if the candidate were to be elected to serve as a member of the executive board; and
   (b) Disclose whether the candidate is a member in good standing. For the purposes of this paragraph, a candidate shall not be deemed to be in "good standing" if the candidate has any unpaid and past due assessments or construction penalties that are required to be paid to the association.
10. Except as otherwise provided in subsections 11 and 12, unless a person is appointed by the declarant:
   (a) A person may not be a candidate for or member of the executive board or an officer of the association if:
      (1) The person resides in a unit with, is married to, is domestic partners with, or is related by blood, adoption or marriage within the third degree of consanguinity or affinity to another person who is also a member of the executive board or is an officer of the association;
      (2) The person stands to gain any personal profit or compensation of any kind from a matter before the executive board of the association; or
      (3) The person, the person's spouse or the person's parent or child, by blood, marriage or adoption, performs the duties of a community manager for that association.

   (b) A person may not be a candidate for or member of the executive board of a master association or an officer of that master association if the person, the person's spouse or the person's parent or child, by blood, marriage or adoption, performs the duties of a community manager for:
      (1) That master association; or
      (2) Any association that is subject to the governing documents of that master association.

Please use the following lines to respond to the statutory requirements pursuant to NRS 116.31034 (9) (a)

***Attach additional sheets, if necessary*:** _____

I am a candidate in good standing pursuant to NRS 116.31034(9) (b): ..... ☒ Yes ☐ No

If no, please explain: _____

Please indicate all that apply to your relation to any board members, officer(s) of the association or community managers:

I am:

- ☐ Residing within the same unit as a board member or officer.
- ☐ Married to a board member or officer.
- ☐ Domestic partners with a board member or officer.
- ☒ **None of the above**

Related to a board member by:

- ☐ Blood
- ☐ Adoption
- ☐ Marriage within the third degree of consanguinity
- ☐ Affinity to another person
- ☒ **None of the above**

The candidate must make all disclosures required pursuant to this subsection in writing to the association with his or her candidacy information. Except as otherwise provided in this subsection, the association shall distribute the disclosures, on behalf of the candidate, to each member of the association with the ballot or, in the event ballots are not prepared and mailed pursuant to subsection 5, in the next regular mailing of the association. The association is not obligated to distribute any disclosure pursuant to this subsection if the disclosure contains information that is believed to be defamatory, libelous or profane.

Any additional information provided by the candidate for the executive board is voluntary and is not a requirement under NRS 116.31034.

Richard Wilde
Signature of candidate

Date May 28, 2021

Exhibit #14
Pg 3

RICH WILDE
NO STATEMENT
SUBMITTED

Case 2021-761

Allegation #3

Exhibit #1

Lyon County Property Appraiser

Exhibit #1
Pg1



016-361-35

/parcel/01636135 Palmer Gatehouse & Gates (Entrance) & Street

0
DAYTON VALLEY, NV

Owners
TOUR SPECS GOLF MANAGEMENT LLC

Mailing Address
681 ST ANDREW DR
DAYTON, NV 89403-0000

DOR Code: 450 - Golf Course
Neighborhood Code: NONE - NONE

Legal Description
18/19-16-22 /PAR 3
Created from split of parcel # 016-361-26 TWN/BLK: 16
RANGE: 22 ACRES: 280.59
POR. SECTIONS 17/18/19-16-22; PAR 1A-1 PM #182901
TWN/BLK: 16 RANGE: 22 ACRES: 219.72
Created from split of Parcel # 016-361-31 TWN/BLK: 16
RANGE: 22 ACRES: 219.72
FR SW4; FR E2 SEC/LOT: 18 TWN/BLK: 16 RANGE: 22
FR N2 SEC/LOT: 19 TWN/BLK: 16 RANGE: 22
PARCEL 3 (REMAINDER) OF PM #232542 TWN/BLK: 16
RANGE: 22 ACRES: 146.63

Lyon County
Nevada

Exhibit #1
Pg 2

Parcel 016-361-35

Owners

TOUR SPECS GOLF MANAGEMENT LLC
681 ST ANDREW DR
DAYTON, NV 89403-0000

Parcel Summary

Location	0 DAYTON VALLEY, NV
Use Code	450: Golf Course
Tax District	8.8: Central Lyon Fire District
Map Parcel	PAR 3
Plat Maps	016-36.1.pdf (720kb) 016-36.2.pdf (498kb) 016-36.3.pdf (405kb)
Map Documents	PAR182901 PAR232542

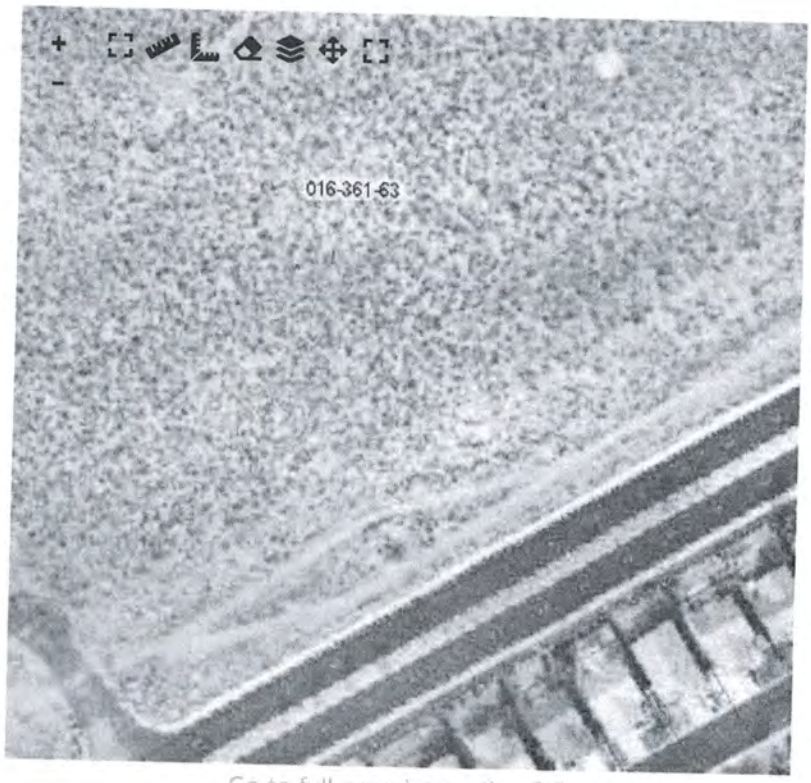

Go to full page interactive GIS

Value History

	2021	2020	2019	2018	2017	2016	2015
Total Building Value	$0	$790,117	$790,117	$790,117	$790,117	$790,117	$790,117
Total Extra Features Value	$2,015,708	$0	$0	$0	$0	$0	$0
Total Land Value	$130,207	$130,200	$130,200	$130,200	$130,200	$130,200	$130,200
Taxable Value	$2,145,915	$920,317	$920,317	$920,317	$920,317	$920,317	$920,317
Net Exemptions Value	$0	$0	$0	$0	$0	$0	$0
Net Assessed Value	$751,070	$322,111	$322,111	$322,111	$322,111	$322,111	$322,111
New Improvements	$0	$0	$0	$0	$0	$0	$0
New Land	$0	$0	$0	$0	$0	$0	$0

Document/Transfer/Sales History

Official Record	Date	Type	V/I	Dcl Value	Ownership
626936	2020-12-17	RE-RECORDED DOCUMENT	Vacant	$0	Grantee: TOUR SPECS GOLF MANAGEMENT LLC
626921	2020-12-16	GRANT BARGAIN SALE DEED	Improved	$1,165,000	Grantee: TOUR SPECS GOLF MANAGEMENT LLC

Official Record	Date	Type	V/I	Dcl Value	Ownership Exhibit #1 Pg 3
458577	2010-04-06	GRANT BARGAIN SALE DEED	Improved	$750,000	Grantor: THREE-J INC Grantee: DAYTON VALLEY GOLF COURSE LLC
260136	2001-04-25	EASEMENT/RIGHT-OF-WAY DEED	Vacant	$0	Grantee: DAYTON VALLEY INVESTORS LLC
255373	2000-12-12	GRANT BARGAIN SALE DEED	Vacant	$2,500,000	Grantor: COMLAW NO 445 LIMITED Grantee: THREE-J INC
232542	1999-04-19	PARCEL MAP	Vacant	$0	Grantee: COMLAW NO 445 LIMITED
217292	1998-04-09	GRANT BARGAIN SALE DEED	Vacant	$0	Grantee: COMLAW NO 445 LIMITED
182901	1995-06-07	PARCEL MAP	Vacant	$0	Grantee: JOHN LAWRENCE (NEVADA) INC
139969	1991-03-05	EASEMENT/RIGHT-OF-WAY DEED	Vacant	$0	Grantee: JOHN LAWRENCE (NEVADA) INC
138203	1990-12-10	RELEASE DEFERRED TAX LIEN	Vacant	$0	Grantee: JOHN LAWRENCE (NEVADA) INC
124613	1989-05-24	BOUNDARY ADJUSTMENT MAP	Vacant	$0	
111626	1987-11-17	GREEN BELT APPROVED	Vacant	$0	
105478	1987-02-13	GRANT BARGAIN SALE DEED	Vacant	$0	
102038	1986-09-12	PARCEL MAP	Vacant	$0	
92698	1985-05-15	GREEN BELT APPROVED	Vacant	$0	
90464	1984-12-31	GRANT BARGAIN SALE DEED	Vacant	$0	
90460	1984-12-31	GRANT BARGAIN SALE DEED	Vacant	$0	
90459	1984-12-31	EXECUTORS/ADMINISTRATORS DEED	Vacant	$0	
90279	1984-12-17	ESTATE/DECREE OF DISTRIBUTION	Vacant	$0	

Buildings

None

Extra Features

Code	Description	Length	Width	Units	Unit Price	AYB	Repl Cost	% Good Condition	Depreciated Value*	Notes
HOLE3	GOLF HOLE PRIVATE CL3 1/19			15.00	$166,892	1990	$2,503,380	54%	$1,339,308	
GBRIDGES	GOLF BRIDGE TUNNEL PER HOLE/CLASS 1/19			2.00	$14,732	1990	$29,464	54%	$15,763	
LAKES	PER SQ FT 1/19			928214.00	$1	1990	$1,197,396	54%	$640,607	
SHEDS3	SHEDS TYPE 1 1=DIRT 2,3=CONCRETE 1/19	18	28	504.00	$19	1990	$9,329	54%	$4,991	
SHEDS3	SHEDS TYPE 1 1=DIRT 2,3=CONCRETE 1/19			256.00	$21	1994	$5,372	60%	$3,196	

CICC0258

Code	Description	Length	Width	Units	Unit Price	AYB	Repl Cost	% Good Condition	Depreciated Value*	Notes
FIXT 4	FIXTURES FOR CLASS 4 BLDGS 1/19			8.00	$2,488	1994	$19,904	60%	$11,843	

*RCNLD: Replacement Cost New, Less Depreciation

Exhibit #1
Pg 4

Personal Property

None

Land Lines

Code	Description	Zone	Front	Depth	Land Units	Unit Type	Acreage	Total Adj	Value	Notes
450	Golf Course	NR1			146.63	RATE	146.63	0.74	$130,207	

Disclaimer

All parcel data on this page is for use by the Lyon County Property Appraiser for assessment purposes only. The summary data on this page may not be a complete representation of the parcel or of the improvements thereon. Building information, including unit counts and number of permitted units, should be verified with the appropriate building and planning agencies. Zoning information should be verified with the appropriate planning agency. All parcels are reappraised each year. This is a true and accurate copy of the records of the Lyon County Assessor's Office as of May 07, 2021.

Home | Accessibility | ©2020 GSA, Government Software Assurance Corp

Case 2021-761

Allegation #3

Exhibit #2

Lyon County Property Appraiser

Exhibit #2
Pg 1

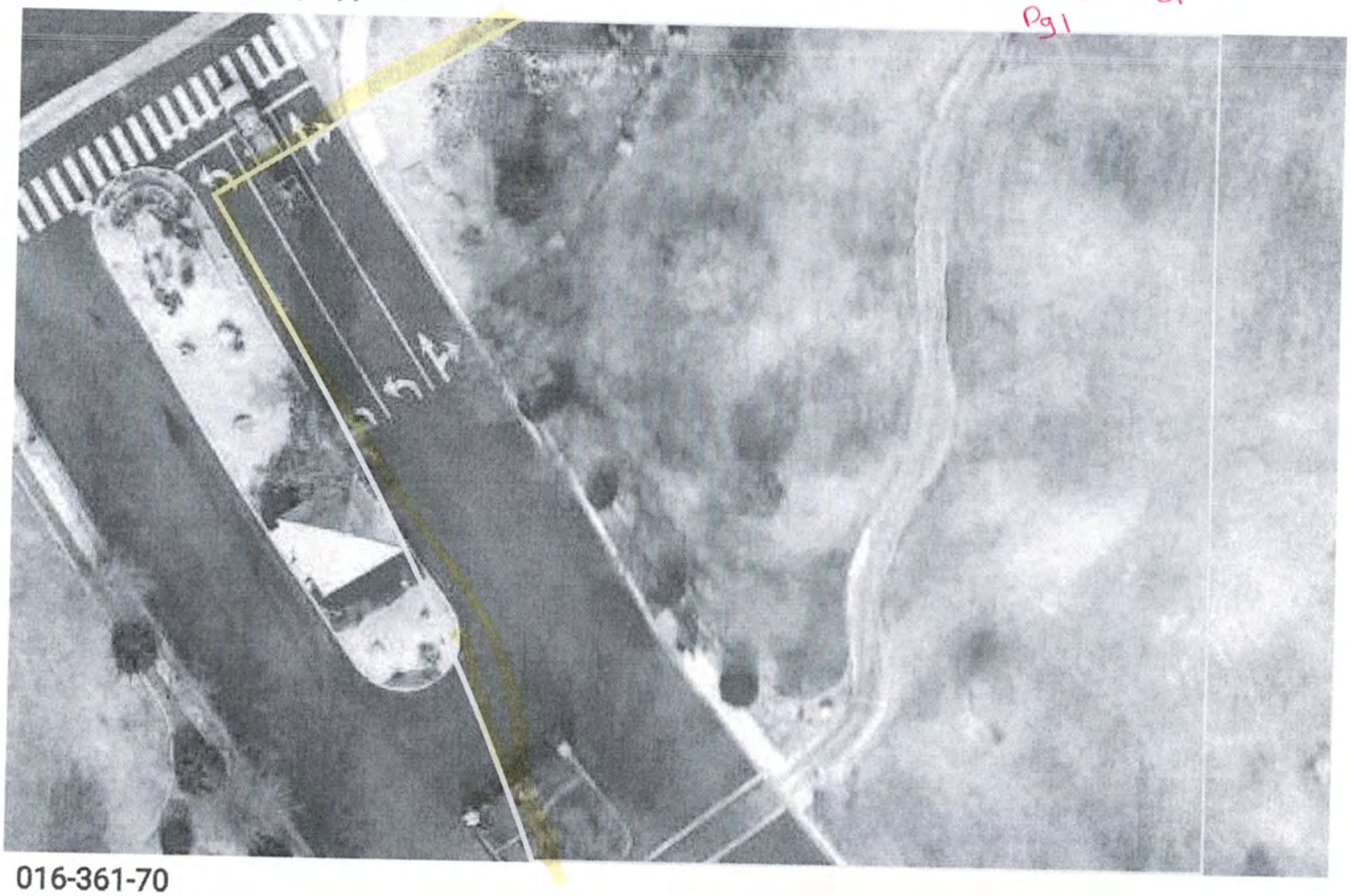

016-361-70

/parcel/01636170

Palmer Gate (Exit)

101 PALMER DR
DAYTON VALLEY, NV

Owners
TOUR SPECS GOLF MANAGEMENT LLC

Mailing Address
681 ST ANDREW DR
DAYTON, NV 89403-0000

Legal Description
17/18-16-22
Created from split of Parcel # 016-361-23 TWN/BLK: 16
RANGE: 22 ACRES: 240.72
FR W2 SEC/LOT: 17 TWN/BLK: 16 RANGE: 22
FR E2 E2 SE4 NE4 SEC/LOT: 18 TWN/BLK: 16 RANGE: 22
PARCEL 3 OF PM #232541 TWN/BLK: 16 RANGE: 22
ACRES: 57.75
Changed from Parcel # 016-361-39
FR W2 SEC/LOT: 17 TWN/BLK: 16 RANGE: 22
FR E2 SE4 NE4 PARCEL 3 ADJUSTED BA 259102
SEC/LOT: 18 TWN/BLK: 16 RANGE: 22 ACRES: 57.67
Changed from Parcel # 016-361-43

DOR Code: 450 - Golf Course
Neighborhood Code: NONE - NONE

Parcel 3B Adjusted from BA 342251 ACRES: 61.41
Changed from Parcel # 016-361-58 adj par 1 SEC/LOT:
17 TWN/BLK: 16 RANGE: 22 ACRES: 56.13

Exhibit #2
Pg 2

CICC0262

Lyon County Nevada

Exhibit #2
Pg 3

Parcel 016-361-70

Owners

TOUR SPECS GOLF MANAGEMENT LLC
681 ST ANDREW DR
DAYTON, NV 89403-0000

Parcel Summary

Location	101 PALMER DR DAYTON VALLEY, NV
Use Code	450: Golf Course
Tax District	8.8: Central Lyon Fire District
Map Parcel	ADJ PAR 1
Plat Maps	016-36.1.pdf (720kb) 016-36.2.pdf (498kb) 016-36.3.pdf (405kb)
Map Documents	PAR102038 PAR232541 BAM259102 BAM551567

Additional Site Addresses

900 LAKEVIEW DR
97 PALMER DR



Go to full page interactive GIS

Value History

	2021	2020	2019	2018	2017	2016	2015
Total Building Value	$2,254,689	$165,014	$165,014	$165,014	$165,014	$165,014	$171,431
Total Extra Features Value	$573,012	$0	$0	$0	$0	$0	$0
Total Land Value	$49,843	$49,857	$49,857	$49,857	$49,843	$49,843	$54,543
Taxable Value	$2,877,544	$214,871	$214,871	$214,871	$214,857	$214,857	$225,974
Net Exemptions Value	$0	$0	$0	$0	$0	$0	$0
Net Assessed Value	$1,007,140	$75,205	$75,205	$75,205	$75,200	$75,200	$79,091
New Improvements	$0	$0	$0	$0	$0	$0	$0
New Land	$0	$0	$0	$0	$0	$0	$0

Document/Transfer/Sales History

Official Record	Date	Type	V/I	Dcl Value	Ownership
626936	2020-12-17	RE-RECORDED DOCUMENT	Improved	$0	Grantee: TOUR SPECS GOLF MANAGEMENT LLC
626921	2020-12-16	GRANT BARGAIN SALE DEED	Improved	$1,165,000	Grantee: TOUR SPECS GOLF MANAGEMENT LLC

Exhibit #2 Pg 4

Official Record	Date	Type	V/I	Del Value	Ownership
551568	2016-06-10	BOUNDARY ADJUSTMENT DEED	Vacant	$0	Grantee: DAYTON VALLEY GOLF COURSE LLC
551567	2016-06-10	BOUNDARY ADJUSTMENT MAP	Vacant	$0	Grantee: DAYTON VALLEY GOLF COURSE LLC
551566	2016-06-10	MISC DOC/OTHER	Vacant	$0	Grantee: DAYTON VALLEY GOLF COURSE LLC
486626	2012-01-24	MISC DOC/OTHER	Vacant	$0	Grantee: DAYTON VALLEY GOLF COURSE LLC
486625	2012-01-24	DEED	Vacant	$0	Grantee: DAYTON VALLEY GOLF COURSE LLC
458577	2010-05-04	GRANT BARGAIN SALE DEED	Vacant	$750,000	Grantor: THREE-J INC Grantee: DAYTON VALLEY GOLF COURSE LLC
377318	2006-03-14	CORRECTION DEED/DOCUMENT	Vacant	$0	Grantee: THREE-J INC
342253	2005-02-04	BOUNDARY ADJUSTMENT DEED	Vacant	$0	Grantee: THREE-J INC
342251	2005-02-04	BOUNDARY ADJUSTMENT MAP	Vacant	$0	Grantee: THREE-J INC ET AL
259104	2001-03-30	QUITCLAIM DEED	Vacant	$0	Grantee: THREE-J INC
259102	2001-03-30	BOUNDARY ADJUSTMENT MAP	Vacant	$0	Grantee: THREE-J INC
255373	2000-12-12	GRANT BARGAIN SALE DEED	Vacant	$2,500,000	Grantor: COMLAW NO 445 LIMITED Grantee: THREE-J INC
232541	1999-04-19	PARCEL MAP	Vacant	$0	Grantee: COMLAW NO 445 LIMITED
217292	1998-04-09	GRANT BARGAIN SALE DEED	Vacant	$0	Grantee: COMLAW NO 445 LIMITED
140195	1991-03-18	RE-RECORDED DOCUMENT	Vacant	$0	
140107	1991-03-12	RELEASE DEFERRED TAX LIEN	Vacant	$0	
111627	1987-11-17	GREEN BELT APPROVED	Vacant	$0	
105478	1987-02-13	GRANT BARGAIN SALE DEED	Vacant	$0	
102038	1986-09-12	PARCEL MAP	Vacant	$0	
92698	1985-05-15	GREEN BELT APPROVED	Vacant	$0	
90464	1984-12-31	GRANT BARGAIN SALE DEED	Vacant	$0	
90460	1984-12-31	GRANT BARGAIN SALE DEED	Vacant	$0	
90459	1984-12-31	EXECUTORS/ADMINISTRATORS DEED	Vacant	$0	
90279	1984-12-17	ESTATE/DECREE OF DISTRIBUTION	Vacant	$0	

Buildings

Building # 1, Section # 1, CLUB HOUSE 3600SF, Clubhouse

Type	Model	Square Feet	Repl Cost New	YrBlt	WAY	Other % Dpr	Normal % Dpr	% Cond	Value
COMM	311	3600	$344,484	1991	1991	0.00%	45.00%	55.00%	$189,466

Structural Elements

Type	Description	Code	Details
EW_C	EXT WALL-Commercial	887	Stud Walls - Hardboard Lap Siding

Type	Description	Code	Details
HEAT_C	HEAT-Commercial	611	Package Unit
ST	Number of Stories (COMM)	1.00	
WH	Average Wall Height (COMM)	12.00	

Exhibit #2
Pg 5

Subareas

Type	Gross Area	Percent of Base	Adjusted Area
GBA	3,600	100%	3,600

Building # 2, Section # 1, COUNTRY CLUB, Country Club

Type	Model	Square Feet	Repl Cost New	YrBlt	WAY	Other % Dpr	Normal % Dpr	% Cond	Value
COMM	314	14675	$2,717,399	2005	2005	0.00%	24.00%	76.00%	$2,065,223

Structural Elements

Type	Description	Code	Details
EW_C	EXT WALL-Commercial	892	Stud Walls - Stucco On Wire Or Sheat
EW_C	EXT WALL-Commercial	887	Stud Walls - Hardboard Lap Siding
HEAT_C	HEAT-Commercial	611	Package Unit
ST	Number of Stories (COMM)	1.00	
WH	Average Wall Height (COMM)	12.00	
683	Sprinkler System Wet - Commercial	14675.00	

Subareas

Type	Gross Area	Percent of Base	Adjusted Area
GBA	14,675	100%	14,675

Extra Features

Code	Description	Length	Width	Units	Unit Price	AYB	Repl Cost	% Good Condition	Depreciated Value*	Notes
ASPH2	ASPHALT "FAIR" AND "GOOD" 1/19			63400.00	$1	1991	$87,492	55%	$48,121	
CONC G	CONCRETE "GOOD" 1350SF 1/19			1.00	$7,112	1991	$7,112	55%	$3,912	
SPR G	SPRINKLERS "GOOD" 5000SF 1/19			3.00	$5,290	1991	$15,870	55%	$8,729	
COLDSTOR1	WALKIN BOX 1=32 DG 2=5 3=-15 4=-45 1/19	17	17	289.00	$122	1991	$35,174	55%	$19,346	
DECK2	DECK 1=SOFT 2=REDWOOD 3=TREX 1/19			1620.00	$17	1991	$27,994	55%	$15,396	
CHLKTRB3	CH LINK W/TOP RAIL & BARB WIRE 1/19			1650.00	$20	1991	$33,792	55%	$18,586	

Code	Description	Length	Width	Units	Unit Price	AYB	Repl Cost	% Good Condition	Depreciated Value*	Notes
SHEDS3	SHEDS TYPE 1 1=DIRT 2,3=CONCRETE 1/19			64.00	$31	2001	$1,979	70%	$1,385	
HOLE3	GOLF HOLE PRIVATE CL3 1/19			3.00	$166,892	1990	$500,676	54%	$267,862	
LAKES	PER SQ FT 1/19			67438.00	$1	1990	$86,995	54%	$46,542	
SHEDS1	SHEDS TYPE 1 1=DIRT 2,3=CONCRETE 1/19	14	6	84.00	$13	2000	$1,059	69%	$725	
SHEDS2	SHEDS TYPE 1 1=DIRT 2,3=CONCRETE 1/19	12	10	120.00	$20	2000	$2,374	69%	$1,626	
CONCRETE	CONCRETE OVER 1500 SQ FT 1/19	34	45	1530.00	$5	2000	$8,063	69%	$5,523	
SH T22	SHEDS TYPE 2 1=DIRT 2,3=CONCRETE 1/19	17	25	425.00	$13	1991	$5,700	55%	$3,135	
FNCBLK	CONC BLK FNC 1=4' 2=5' 3=6' 4=8' 1/19			65.00	$119	2005	$7,737	76%	$5,880	
ASPH4	ASPHALT "FAIR" AND "GOOD" 1/19			73500.00	$2	2005	$166,110	76%	$126,244	

Exhibit #2 Pg 6

*RCNLD: Replacement Cost New, Less Depreciation

Personal Property

Account	Secured/ Unsecured	Owner	Description
LY005519	Unsecured	DAYTON VALLEY GOLF COURSE LLC	LY - EQUIPMENT-LYON COUNTY

Land Lines

Code	Description	Zone	Front	Depth	Land Units	Unit Type	Acreage	Total Adj	Value	Notes
450	Golf Course	MULT			56.13	RATE	56.13	0.74	$49,843	Zoning: NR1,TC,E1

Disclaimer

All parcel data on this page is for use by the Lyon County Property Appraiser for assessment purposes only. The summary data on this page may not be a complete representation of the parcel or of the improvements thereon. Building information, including unit counts and number of permitted units, should be verified with the appropriate building and planning agencies. Zoning information should be verified with the appropriate planning agency. All parcels are reappraised each year. This is a true and accurate copy of the records of the Lyon County Assessor's Office as of May 07, 2021.

Home | Accessibility | ©2020 GSA, Government Software Assurance Corp

CICC0266

Case 2021-761

Allegation #3

Exhibit #3

DAYTON VALLEY COMMNITY ASSOCIATION

Exhibit #3
Pg 1

Candidacy Disclosure Statement

This form is provided for Homeowners who wish to run for the Board of Directors (you may nominate yourself). You must return this form to us no later than **March 24, 2021 by 5:00 PM.** The official meeting notice advising the exact date, time and location of the Election meeting will be mailed to all homeowners eligible to vote at a later date. There are seven (7) seats on the Board to fill.

NAME OF NOMINEE: ___Jin Kepler_____

ARE YOU A HOMEOWNER IN THE ASSOCIATION STATED ABOVE? ____Yes_____ _____ **YES NO**

Per NRS 116.31034 (5) (a) and (b), please complete the following information regarding your candidacy. Please print your responses.

1.) Each person whose name is placed on the ballot as a candidate for a member of the executive Board must:

(a) Make a good faith effort to disclose any financial, business, professional or personal relationship or interest that would result or would appear to a reasonable person to result in a potential conflict of interest for the candidate if the candidate were to be elected to serve as a member of the executive board; and (Please respond to the statutory requirements cited above).

N/A

(b) disclose whether or not the candidate is a member in good standing for the purpose of this paragraph, a candidate shall not be deemed to be in "good standing" if the candidate has any unpaid or past due assessments or construction penalties that are required to be paid to the association. Please answer the question below by placing an X in the correct answer.

I am a member in "Good Standing" with the Association: Yes x____ No ____

2.) Experience: What skills do you feel you have that will contribute to the Board and Association? (Optional):

I have personally been a homeowner in Dayton Nv for over 30 Years and have lived at the golf course since 2005. Where I was the head Pro to the golf course from 1991-1998. Then I was the General Manager from 1998-2006. I helped with the homeowners before the HOA was established.

3.) Why do you want to serve on the Board? (Optional):

I want to help with the growth in our community. I enjoy the people and feel now is the time for us to make positive changes going forward. As the new owner to the golf course, I feel that a good relationship between the owners, community and golf course is a positive way to move forward.

I reside in a unit with, am married to, domestic partners with, or am related by blood, adoption or marriage within the third degree of consanguinity or affinity to another person who is also a member of the executive board or is an officer of the association. ____yes _x___ no If yes, please explain on a separate sheet of paper).

Note: Nothing cited in this disclosure is intended to prevent a potential candidate from running for the board of directors. Further, the Board will not prohibit a candidate from appearing on the ballot for failure to provide a disclosure statement, or for providing an inaccurate one or one with content that is defamatory, libelous or profane. Should a candidate not complete a disclosure statement, or should it contain content believed to be defamatory, libelous or profane, the board will note the fact in a statement to be included with election-related mailings. Further, a complaint may be filed with the Real Estate Division against the candidate who does not comply with the disclosure requirement.

Nominee Signature (Required): _____

By signing this form I acknowledge that NRS 116.31034 requires a candidate to make all disclosures required by NRS 116.31034 in writing to the Association with his/her candidacy information, and that the disclosures must be distributed by the Association to each Member of the Association, with the ballot, in the manner established in the Bylaws of the Association, for that candidate to be eligible for office. By signing this form I agree to allow the Association to release any of the information I have supplied on this form.

Exhibit #3
Pg 2

CANDIDACY DISCLOSURE STATEMENT

(Please Print or Type)

Name James H. Kepler

Address 681 St. Andrews (Street) Dayton (City) Nv (State) 89403 (Zip)

Are you a unit owner? ..... ☑ **Yes** ☐ **No**

(NOTE: NRS 116.31034(1) states: Except as otherwise provided in subsection 5 of NRS 116.212, not later than the termination of any period of declarant's control, the units' owners shall elect an executive board of at least three members, all of whom must be units' owners.)

NRS 116.31034 (9) (a) & (b) and NRS 116.31034 (10) (a) & (b) states the following:

9. Each person who is nominated as a candidate for membership on the executive board pursuant to subsection 4 must:
   (a) Make a good faith effort to disclose any financial, business, professional or personal relationship or interest that would result or would appear to a reasonable person to result in a potential conflict of interest for the candidate if the candidate were to be elected to serve as a member of the executive board; and
   (b) Disclose whether the candidate is a member in good standing. For the purposes of this paragraph, a candidate shall not be deemed to be in "good standing" if the candidate has any unpaid and past due assessments or construction penalties that are required to be paid to the association.
10. Except as otherwise provided in subsections 11 and 12, unless a person is appointed by the declarant:
   (a) A person may not be a candidate for or member of the executive board or an officer of the association if:
      (1) The person resides in a unit with, is married to, is domestic partners with, or is related by blood, adoption or marriage within the third degree of consanguinity or affinity to another person who is also a member of the executive board or is an officer of the association;
      (2) The person stands to gain any personal profit or compensation of any kind from a matter before the executive board of the association; or
      (3) The person, the person's spouse or the person's parent or child, by blood, marriage or adoption, performs the duties of a community manager for that association.

   (b) A person may not be a candidate for or member of the executive board of a master association or an officer of that master association if the person, the person's spouse or the person's parent or child, by blood, marriage or adoption, performs the duties of a community manager for:
      (1) That master association; or
      (2) Any association that is subject to the governing documents of that master association.

Please use the following lines to respond to the statutory requirements pursuant to NRS 116.31034 (9) (a)

Attach additional sheets, if necessary: See Attached Statement JK

I am a candidate in good standing pursuant to NRS 116.31034(9) (b): ..... ☒ **Yes** ☐ **No**

If no, please explain: _____

Please indicate all that apply to your relation to any board members, officer(s) of the association or community managers:

I am:

- ☐ Residing within the same unit as a board member or officer.
- ☐ Married to a board member or officer.
- ☐ Domestic partners with a board member or officer.
- ☒ **None of the above**

Related to a board member by:

- ☐ Blood
- ☐ Adoption
- ☐ Marriage within the third degree of consanguinity
- ☐ Affinity to another person
- ☒ **None of the above**

The candidate must make all disclosures required pursuant to this subsection in writing to the association with his or her candidacy information. Except as otherwise provided in this subsection, the association shall distribute the disclosures, on behalf of the candidate, to each member of the association with the ballot or, in the event ballots are not prepared and mailed pursuant to subsection 5, in the next regular mailing of the association. The association is not obligated to distribute any disclosure pursuant to this subsection if the disclosure contains information that is believed to be defamatory, libelous or profane.

Any additional information provided by the candidate for the executive board is voluntary and is not a requirement under NRS 116.31034.

James H. Kepler
Signature of candidate

5/26/2021
Date

Revised 7/18/19

CICC0269

Exhibit #3
Pg 3

March 23, 2021

To Whom it May Concern:

My name is Jim Kepler, Sr. I have been a resident of Dayton Valley since 1991. As a Class A PGA Golf Professional for 36 years and present during the inception of Dayton Valley Golf Course I feel I have the dedication necessary to be an effective and knowledgeable asset to the Homeowner's Association Board.

I personally purchased a home on the golf course in 2005 and have watched the Dayton Valley Gated Community grow from 6 homes to over 800 homes. Previously as the General Manager from 1998-2006 and then being rehired in 2018 to manage again, I have worked extensively with the Developers, the HOA and County Officials to make DV a great community to live.

My wife and I have raised six children here and we are committed to the Dayton community. I have established not only business relationships but community relationships with the education system, youth sports, Veterans, Water, Sewer, County Fire Department, Lyon County Public Works, Chamber of Commerce and Community Roots.

I have formed lasting relationships with the Homeowner's on the golf course and in the surrounding community. In December 2020, with the support of Dayton Valley homeowners and outside investors, we completed the purchase of Dayton Valley Golf Course. As such, I have a vested interest in seeing the community continue to flourish.

I also want to assure the board that if there are potential conflicts of interest, I will always recuse myself.

I would appreciate your support for a position on the board.

Sincerely, Jim Kepler, Sr.

Case 2021-761

Allegation #3

Exhibit #4

Exhibit #4
Pg1

ENTITY INFORMATION

ENTITY INFORMATION

Entity Name:

TOUR SPECS GOLF MANAGEMENT, LLC

Entity Number:

E7519202020-3

Entity Type:

Domestic Limited-Liability Company (86)

Entity Status:

Active

Formation Date:

06/29/2020

NV Business ID:

NV20201821326

Termination Date:

Perpetual

Annual Report Due Date:

6/30/2021

Series LLC:

☐

Restricted LLC:

☑

REGISTERED AGENT INFORMATION

Name of Individual or Legal Entity:

ALLISON MACKENZIE, LTD.

Exhibit #4
Pg 2

Status:

Active

CRA Agent Entity Type:

Registered Agent Type:

Commercial Registered Agent

NV Business ID:

Office or Position:

Jurisdiction:

NEVADA

Street Address:

402 NORTH DIVISION STREET, Carson City, NV, 89703, USA

Mailing Address:

Individual with Authority to Act:

MIKE PAVLAKIS

Fictitious Website or Domain Name:

OFFICER INFORMATION

☐ **VIEW HISTORICAL DATA**

Title	Name	Address	Last Updated	Status
Manager	Reliance Golf Management, LLC	681 St. Andrews, Dayton, NV, 89403, USA	06/29/2020	Active

Page 1 of 1, records 1 to 1 of 1

Filing History Name History Mergers/Conversions

Return to Search Return to Results

Exhibit #4
Pg 3

Case 2021-761

Allegation #3

Exhibit #5

Exhibit #5
Pg 1

ENTITY INFORMATION

ENTITY INFORMATION

Entity Name:

RELIANCE GOLF MANAGEMENT DAYTON VALLEY MANAGEMENT, LLC

Entity Number:

E8056692020-9

Entity Type:

Domestic Limited-Liability Company (86)

Entity Status:

Active

Formation Date:

07/24/2020

NV Business ID:

NV20201848423

Termination Date:

Perpetual

Annual Report Due Date:

7/31/2021

Series LLC:

☐

Restricted LLC:

☐

REGISTERED AGENT INFORMATION

Name of Individual or Legal Entity:

ALLISON MACKENZIE, LTD.

Status:

Active

Exhibit #5
Pg 2

CRA Agent Entity Type:

Registered Agent Type:

Commercial Registered Agent

NV Business ID:

Office or Position:

Jurisdiction:

NEVADA

Street Address:

402 NORTH DIVISION STREET, Carson City, NV, 89703, USA

Mailing Address:

Individual with Authority to Act:

MIKE PAVLAKIS

Fictitious Website or Domain Name:

OFFICER INFORMATION

☐ **VIEW HISTORICAL DATA**

Title	Name	Address	Last Updated	Status
Manager	Jim Kepler	681 St. Andrews, Dayton, NV, 89403, USA	07/24/2020	Active

Page 1 of 1, records 1 to 1 of 1

Filing History Name History Mergers/Conversions

Return to Search Return to Results

Exhibit #5
Pg 3

Case 2021-761

Allegation #3

Exhibit #6

Exhibit #6
Pg 1

ENTITY INFORMATION

ENTITY INFORMATION

Entity Name:

RELIANCE GOLF MANAGEMENT, L.L.C.

Entity Number:

E0187062017-3

Entity Type:

Domestic Limited-Liability Company (86)

Entity Status:

Active

Formation Date:

04/19/2017

NV Business ID:

NV20171253159

Termination Date:

Perpetual

Annual Report Due Date:

4/30/2022

Series LLC:

☐

Restricted LLC:

☐

REGISTERED AGENT INFORMATION

Name of Individual or Legal Entity:

JAMES H. KEPLER, SR CEO

Exhibit #6
Pg 2

Status:

Active

CRA Agent Entity Type:

Registered Agent Type:

Non-Commercial Registered Agent

NV Business ID:

Office or Position:

Jurisdiction:

Street Address:

681 ST ANDREWS DRIVE, DAYTON, NV, 89403, USA

Mailing Address:

Individual with Authority to Act:

Fictitious Website or Domain Name:

OFFICER INFORMATION

☐ **VIEW HISTORICAL DATA**

Title	Name	Address	Last Updated	Status
Manager	JAMES H KEPLER	681 ST. ANDREW DR, DAYTON, NV, 89403, USA	02/01/2019	Active
Manager	DAVID E KEPLER II	681 ST. ANDREW DR, DAYTON, NV, 89403, USA	02/01/2019	Active

Page 1 of 1, records 1 to 2 of 2

Filing History Name History Mergers/Conversions

Return to Search Return to Results

Exhibit #6
Pg 3

CICC0282

Case 2021-761

Allegation #3

Exhibit #7

Exhibit #7

Dayton Valley Community Associaiton
2020 Operating and Reserve Budget

INCOME:				
Income Category	**2019 BUDGET**	**ESTIMATED 2019**	**2020 Draft BUDGET**	
Assessments	$422,400.00	$397,380.00	$457,800.00	Holiday Assessment for 1 month - Assessments $50 Vacant Lots $30
Vacant Lot Fees	$18,150.00	$21,570.00	$21,600.00	763 Lots $150 Quarter
Late Fees	$0.00	2,400.00	$0.00	60 Lots $90/Quarter
Gate Remote Fees	$0.00	1,600.00	$1,100.00	
Bad Debt Income	-$8,000.00	-20,950.00	-$23,970.00	5% Allowence based on Assessements
Weed Control Reimbursements	$0.00	3,000.00	$0.00	
Road Maintenance Fee	$10,000.00	3,000.00	$10,000.00	Based on the Sale of 10 New Homes in 2020
Operating Acct Interest Income	$45.00	295.00	$250.00	
Transfer to Reserves	-$179,488.00	-$179,488.00	-$179,488.00	Based on the 2017 Reserve Study Update
TOTAL INCOME	**$263,107.00**	**228,807.00**	**$287,292.00**	
OPERATING EXPENSES:				
Expense Category	**2019 BUDGET**	**ESTIMATED 2018**	**2020 BUDGET**	
REPAIRS MAINTENANCE:				
Drainage Maintenance	$5,000.00	$3,500.00	$4,000.00	
Fence Repairs & Maintenance	$6,660.00	$2,500.00	$5,000.00	Board to Continue Improving Perimeter Fencing
Gate Repairs	$5,000.00	$750.00	$0.00	
Gate Maintenance Contract	$2,600.00	$1,950.00	$2,600.00	CAS
Guard Shack Maintenance	$2,000.00	$0.00	$1,000.00	
Back Flow Preventative Maintenance	$2,600.00	$1,110.00	$1,200.00	
Landscape Contract	$23,364.00	$27,558.00	$50,000.00	Based on easement agreement with Duncan
Light Post Repairs & Maintenance	$1,000.00	$140.00	$1,000.00	
Pest Control	$1,000.00	$1,500.00	$1,500.00	
Signs	$1,000.00	$6,700.00	$1,000.00	
Snow Removal	$1,000.00	$0.00	$1,000.00	
Street Sweeping	$5,000.00	$0.00	$5,000.00	Leaf Removal
Surveillance Camera Repair & Maintenance	$3,500.00	$0.00	$3,500.00	
Weed Control Lots	$2,500.00	$3,000.00	$2,500.00	Common Areas Lots (reimbursed)
Contingency / Other Oper Exp	$14,633.00	$17,200.00	$24,042.00	Light Installation and converstion and Misc. Supplies
Landscape Projects	$10,000.00	$1,800.00	$5,000.00	Tree trimming and landscape improvements
ADMINISTRATION EXPENSES:				
Audit	$4,000.00	$925.00	$1,000.00	
Bank Charges	$100.00	75	$100.00	
Copying / Printing	$5,000.00	$5,000.00	$5,500.00	
Coupons	$2,500.00	$4,195.00	$5,000.00	
Fees & Permits (SOS & NRED)	$4,000.00	$300.00	$4,000.00	
Gate Remotes	$4,580.00	$4,300.00	$1,200.00	
Insurance	$6,000.00	$13,200.00	$15,000.00	
Legal	$12,000.00	$10,000.00	$12,000.00	
Management Fees	$66,750.00	$66,750.00	$66,750.00	
Pilera	$0.00	$0.00	$7,000.00	
Meeting Expense	$6,000.00	$0.00	$0.00	
Newsletter	$16,800.00	$15,600.00	$16,800.00	Newsletter Sent Out By Monarch Printing
Supplies	$1,000.00	$250.00	$1,000.00	
Postage	$3,500.00	$2,300.00	$3,500.00	
Property Tax	$20.00	$75.00	$100.00	
Record Storage	$1,000.00	$950.00	$1,000.00	
Social Committee	$5,000.00	$5,000.00	$5,000.00	
Utilities - Electricity	$16,000.00	$16,500.00	$17,000.00	
Utilities - Cable/Internet	$3,000.00	$1,600.00	$3,000.00	
Utilities - Water/Sewer Expense	$15,000.00	$6,600.00	$10,000.00	
Website Expense	$4,000.00	$1,600.00	$4,000.00	
TOTAL OPERATING EXPENSE	**$263,107.00**	**$222,928.00**	**$287,292.00**	
NET OPERATING INCOME:	**$0.00**	**$5,879.00**	**$0.00**	
RESERVE ACCOUNT ACTIVITY:				
Reserve Fund Summary	**2019 BUDGET**	**ESTIMATED 2019**	**2020 BUDGET**	
Beginning Balance Jan 1:	**$1,736,772.56**	**$2,298,048.00**	**$ 1,994,153.95**	
• Contributions (Maintenance)	$ 179,448.00	$ 179,448.00	$ 179,448.00	
• Interest	$ 36,000.00	$36,000.00	$ 51,898.00	
Less: • Reserve Expenses	-$11,680.00	-$776,723.44	-$23,001.00	
Ending Balance Dec 31:	**$1,940,540.56**	**$1,736,772.56**	**$2,202,498.95**	
Yr-End Target per Reserve Study	**$1,863,491.00**	**$1,863,491.00**	**$ 2,065,169.00**	100% Percent Funded
RESERVE DISBURSEMENT DETAIL:				
Reserve Fund Disbursements	**2019 BUDGET**	**ESTIMATED 2019**	**2020 BUDGET**	
Annual Crack Fill	$ 20,000.00	$706,950.00	$ -	Board Approved Annual Crack Sealing
Major Landscape Improvements	$ 10,618.00	$7,203.00	$ 10,243.00	
Gate Maintenance Contract	$ -	$20,101.52	$ 3,073.00	
Gate Improvements	$ -	$23,112.33	$ -	
Signs Throughout Community	$ -	$19,356.59	$ -	
Surveillance Camera Repair/Replacement	$ -	$0.00	$ -	
Fire Hydrant Painting	$ -	$0.00	$ 1,819.00	
Valley Gutters	$ -	$0.00	$ 184.00	
Fence and Gate Painting	$ -	$0.00	$ 2,049.00	
Immediate Repairs to Block Wall	$ -	$0.00	$ 512.00	
Water Feature Repairs	$ -	$0.00	$ 3,073.00	
Guard House Painting		$600	$ 2,048.00	
TOTAL	**$ 30,618.00**	**$776,723.44**	**$ 23,001.00**	

3D BCT 2019

Case 2021-761

Allegation #3

Exhibit #8

2021 Operating and Reserve Budget

Exhibit #8

INCOME:				
Income Category	**2020 BUDGET**	**ESTIMATED 2020**	**2021 Draft BUDGET**	
Assessments	$457,800.00	$394,406.00	$457,800.00	Assessments $50 Vacant Lots $30
Vacant Lot Fees	$21,600.00	$17,743.00	$21,600.00	763 Lots $150 Quarter
Late Fees	$0.00	1,500.00	$0.00	60 Lots $90/Quarter
Gate Remote Fees	$1,100.00	2,208.00	$1,100.00	
Bad Debt Income	-$23,970.00	-20,950.00	-$23,970.00	5% Allowence based on Assessements
Weed Control Reimbursements	$0.00	3,000.00	$2,500.00	
Road Maintenance Fee	$10,000.00	0.00	$10,000.00	Based on the Sale of 10 New Homes in 2020
Operating Acct Interest Income	$250.00	215.00	$250.00	
Transfer to Reserves	-$179,488.00	-$179,488.00	-$179,488.00	Based on the 2020 Reserve Study Update
TOTAL INCOME	**$287,292.00**	**218,634.00**	**$289,792.00**	

OPERATING EXPENSES:				
Expense Category	**2020 BUDGET**	**ESTIMATED 2020**	**2021 BUDGET**	
REPAIRS MAINTENANCE:				
Drainage Maintenance	$4,000.00	$3,500.00	$4,000.00	
Fence Repairs & Maintenance	$5,000.00	$5,000.00	$0.00	Board to Continue Improving Perimeter Fencing.
Gate Repairs	$0.00	$750.00	$0.00	
Gate Maintenance Contract	$2,600.00	$32,465.00	$2,600.00	CAS
Guard Shack Maintenance	$1,000.00	$0.00	$1,000.00	
Back Flow Preventative Maintenance	$1,200.00	$1,100.00	$1,200.00	
Landscape Contract	$50,000.00	$40,150.00	$50,000.00	Based on easement agreement with Duncan
Light Post Repairs & Maintenance	$1,000.00	$1,600.00	$1,000.00	
Pest Control	$1,500.00	$1,250.00	$1,500.00	
Signs	$1,000.00	$500.00	$1,000.00	
Snow Removal	$1,000.00	$0.00	$1,000.00	
Street Sweeping	$5,000.00	$0.00	$5,000.00	Leaf Removal
Surveillance Camera Repair & Maintenance	$3,500.00	$850.00	$3,500.00	
Weed Control Lots	$2,500.00	$3,000.00	$2,500.00	Common Areas Lots (reimbursed)
Contingency / Other Oper Exp	$24,042.00	$17,200.00	$14,000.00	Light Installation and converstion and Misc. Supplies
Landscape Projects	$5,000.00	$1,800.00	$4,500.00	Tree trimming and landscape improvements
ADMINISTRATION EXPENSES:				
Audit	$1,000.00	$925.00	$1,000.00	
Bank Charges	$100.00	75	$100.00	
Copying / Printing	$5,500.00	$5,000.00	$5,500.00	
Coupons	$5,000.00	$4,195.00	$5,000.00	
Fees & Permits (SOS & NRED)	$4,000.00	$300.00	$4,000.00	
Gate Remotes	$1,200.00	$4,300.00	$4,000.00	
Insurance	$15,000.00	$13,200.00	$15,000.00	
Legal	$12,000.00	$10,000.00	$12,000.00	
Management Fees	$66,750.00	$66,750.00	$66,750.00	
Pilera	$7,000.00	$0.00	$0.00	
Meeting Expense	$0.00	$0.00	$0.00	
Newsletter	$16,800.00	$15,600.00	$16,800.00	Newsletter Sent Out By Monarch Printing
Supplies	$1,000.00	$250.00	$1,000.00	
Postage	$3,500.00	$2,300.00	$3,500.00	
Property Tax	$100.00	$75.00	$100.00	
Record Storage	$1,000.00	$950.00	$1,000.00	
Social Committee	$5,000.00	$5,000.00	$5,000.00	
Utilities - Electricity	$17,000.00	$16,500.00	$17,000.00	
Utilities - Cable/Internet	$3,000.00	$1,600.00	$3,000.00	
Utilities - Water/Sewer Expense	$10,000.00	$6,600.00	$10,000.00	
Website Expense	$4,000.00	$1,600.00	$4,000.00	
TOTAL OPERATING EXPENSE	**$287,292.00**	**$264,385.00**	**$267,550.00**	
NET OPERATING INCOME:	**$0.00**	**-$45,751.00**	**$22,242.00**	

RESERVE ACCOUNT ACTIVITY:				
Reserve Fund Summary	**2020 BUDGET**	**ESTIMATED 2020**	**2021 BUDGET**	
Beginning Balance Jan 1:	$ 1,739,337.00	$2,298,048.00	$ 1,994,153.95	
• Contributions (Maintenance)	$ 179,448.00	$ 179,448.00	$ 179,448.00	
• Interest	$ 51,898.00	$36,000.00	$ 51,898.00	
Less: • Reserve Expenses	-$22,817.00	-$734,254.52	-$86,462.00	
Ending Balance Dec 31:	**$1,947,866.00**	**$1,779,241.48**	**$2,139,037.95**	
Yr-End Target per Reserve Study	**$ 2,065,169.00**	**$1,863,491.00**	**$ 2,065,169.00**	100% Percent Funded

RESERVE DISBURSEMENT DETAIL:

Reserve Fund Disbursements	**2020 BUDGET**	**ESTIMATED 2020**	**2021 BUDGET**	
Annual Crack Fill	$ -	$706,950.00	$ 67,597.00	Board Approved Annual Crack Sealing
Major Landscape Improvements	$ 10,243.00	$7,203.00	$ 10,202.00	
Gate Maintenance Contract	$ 3,073.00	$20,101.52	$ 4,081.00	
La Costa Slurry Seal			$ 1,291.00	Emergency access road
Ballybunion Slurry Seal			$ 153.00	Emergency gate area
Surveillance Camera Repair/Replacement	$ -	$0.00		
Fire Hydrant Painting	$ 1,819.00	$0.00	$ 77.00	May have already been completed
Onsite reserve study		$0.00	$ 3,061.00	
Fence and Gate Painting	$ 2,049.00	$0.00		
Immediate Repairs to Block Wall	$ 512.00	$0.00		
Water Feature Repairs	$ 3,073.00	$0.00		
Guard House Painting	$ 2,048.00	$0.00		
TOTAL	$ 22,817.00	$734,254.52	$ 86,462.00	

Case 2021-761

Allegation #3

Exhibit #9

9874888-14-3-4

DAYTON VALLEY COMMNITY ASSOCIATION

Exhibit #9
Pg1

Candidacy Disclosure Statement

s form is provided for Homeowners who wish to run for the Board of Directors (you may nominate yourself). You must return this form to us no later than **March 24, 2021 by 5:00 PM.** The official meeting notice advising the exact date, time and location of the Election meeting will be mailed to all homeowners eligible to vote at a later date. There are seven (7) seats on the Board to fill.

NAME OF NOMINEE: DOUG KREIE

ARE YOU A HOMEOWNER IN THE ASSOCIATION STATED ABOVE? (YES) NO

Per NRS 116.31034 (5) (a) and (b), please complete the following information regarding your candidacy. Please print your responses.

1.) Each person whose name is placed on the ballot as a candidate for a member of the executive Board must:

(a) Make a good faith effort to disclose any financial, business, professional or personal relationship or interest that would result or would appear to a reasonable person to result in a potential conflict of interest for the candidate if the candidate were to be elected to serve as a member of the executive board; and (Please respond to the statutory requirements cited above).

(b) disclose whether or not the candidate is a member in good standing for the purpose of this paragraph, a candidate shall not be deemed to be in "good standing" if the candidate has any unpaid or past due assessments or construction penalties that are required to be paid to the association. Please answer the question below by placing an X in the correct answer.

I am a member in "Good Standing" with the Association: Yes X **No** ___

2.) Experience: What skills do you feel you have that will contribute to the Board and Association? (Optional):

Self EMPLOYED FOR 30 YEARS DEALING IN ALL ASPECTS OF BUSINESS

3.) Why do you want to serve on the Board? (Optional):

I HAVE BEEN ON THE BOARD FOR 2 YEARS AS ARCHITECURAL COMMITTE CHAIRMAN & WOULD LIKE TO CONTINUE.

I reside in a unit with, am married to, domestic partners with, or am related by blood, adoption or marriage within the third degree of consanguinity or affinity to another person who is also a member of the executive board or is an officer of the association. ____ yes ____ no If yes, please explain on a separate sheet of paper).

Note: Nothing cited in this disclosure is intended to prevent a potential candidate from running for the board of directors. Further, the Board will not prohibit a candidate from appearing on the ballot for failure to provide a disclosure statement, or for providing an inaccurate one or one with content that is defamatory, libelous or profane. Should a candidate not complete a disclosure statement, or should it contain content believed to be defamatory, libelous or profane, the board will note the fact in a statement to be included with election-related mailings. Further, a complaint may be filed with the Real Estate Division against the candidate who does not comply with the disclosure requirement.

Nominee Signature (Required): D. Kreie

By signing this form I acknowledge that NRS 116.31034 requires a candidate to make all disclosures required by NRS 116.31034 in writing to the Association with his/her candidacy information, and that the disclosures must be distributed by the Association to each Member of the Association, with the ballot, in the manner established in the Bylaws of the Association, for that candidate to be eligible for office. By signing this form I agree to allow the Association to release any of the information I have supplied on this form.

9874888 8750FCMP-2

Exhibit #9
Pg 2

CANDIDACY DISCLOSURE STATEMENT

(Please Print or Type)

Name DOUG KREIS

Address 144 SAWGRASS LN (Street) DAYTON (City) NV. (State) 89403 (Zip)

Are you a unit owner? ..... ☒ Yes ☐ No

(NOTE: NRS 116.31034(1) states: Except as otherwise provided in subsection 5 of NRS 116.212, not later than the termination of any period of declarant's control, the units' owners shall elect an executive board of at least three members, all of whom must be units' owners.)

NRS 116.31034 (9) (a) & (b) and NRS 116.31034 (10) (a) & (b) states the following:

9. Each person who is nominated as a candidate for membership on the executive board pursuant to subsection 4 must:
   (a) Make a good faith effort to disclose any financial, business, professional or personal relationship or interest that would result or would appear to a reasonable person to result in a potential conflict of interest for the candidate if the candidate were to be elected to serve as a member of the executive board; and
   (b) Disclose whether the candidate is a member in good standing. For the purposes of this paragraph, a candidate shall not be deemed to be in "good standing" if the candidate has any unpaid and past due assessments or construction penalties that are required to be paid to the association.
10. Except as otherwise provided in subsections 11 and 12, unless a person is appointed by the declarant:
   (a) A person may not be a candidate for or member of the executive board or an officer of the association if:
      (1) The person resides in a unit with, is married to, is domestic partners with, or is related by blood, adoption or marriage within the third degree of consanguinity or affinity to another person who is also a member of the executive board or is an officer of the association;
      (2) The person stands to gain any personal profit or compensation of any kind from a matter before the executive board of the association; or
      (3) The person, the person's spouse or the person's parent or child, by blood, marriage or adoption, performs the duties of a community manager for that association.

   (b) A person may not be a candidate for or member of the executive board of a master association or an officer of that master association if the person, the person's spouse or the person's parent or child, by blood, marriage or adoption, performs the duties of a community manager for:
      (1) That master association; or
      (2) Any association that is subject to the governing documents of that master association.

Please use the following lines to respond to the statutory requirements pursuant to NRS 116.31034 (9) (a)

Attach additional sheets, if necessary: I AM A MINORITY STOCKHOLDER IN TOUR SPECS

I am a candidate in good standing pursuant to NRS 116.31034(9) (b): ..... ☒ Yes ☐ No

If no, please explain: _____

Please indicate all that apply to your relation to any board members, officer(s) of the association or community managers:

I am:

- ☐ Residing within the same unit as a board member or officer.
- ☐ Married to a board member or officer.
- ☐ Domestic partners with a board member or officer.
- ☒ **None of the above**

Related to a board member by:

- ☐ Blood
- ☐ Adoption
- ☐ Marriage within the third degree of consanguinity
- ☐ Affinity to another person
- ☒ **None of the above**

The candidate must make all disclosures required pursuant to this subsection in writing to the association with his or her candidacy information. Except as otherwise provided in this subsection, the association shall distribute the disclosures, on behalf of the candidate, to each member of the association with the ballot or, in the event ballots are not prepared and mailed pursuant to subsection 5, in the next regular mailing of the association. The association is not obligated to distribute any disclosure pursuant to this subsection if the disclosure contains information that is believed to be defamatory, libelous or profane.

Any additional information provided by the candidate for the executive board is voluntary and is not a requirement under NRS 116.31034.

Signature of candidate _____ *Date* 6-2-2021

Revised 7/18/19

CICC0289

Exhibit #9
Pg 3

My name is Doug Kreie and I am running for reelection to the Board of Directors of the Dayton Valley Home Owners Association

I have 30 years' experience as a business owner. I have worked with financials and expense reports as well as profit and loss, cash flow analysis long term views and forward thinking. If this is the type of person you want on the board I would like your vote. I have served as your architectural committee chairman for the last two and a half years. If you have been happy with the way your applications have been handled I would appreciate your vote.

Also I would like to endorse Dennis Drury, Sandy Mass, and Paula Darragh for reelection.

Case 2021-761

No Resolution Letter

From

Joseph F. Hughes

Joseph F. Hughes

August 15, 2021

State of Nevada
Department of Business and Industry
Real Estate Division
Common Interest Communities and
Condominium Hotels Program
Attn: Christy Staffen
3300 West Sahara Ave. Ste.# 350
Las Vegas, NV 89102

RE: Case 2021-761 Joseph F. Hughes vs. Dayton Valley Community Association

Dear Investigator Staffen,

In reference to Case 2021-761, there has been no resolution. I have received two letters from Gayle Kern, Esq. regarding my intention to file Form 530 Intervention Affidavit one dated June 21, 2021, and the other dated July 1, 2021. Please refer to Allegation #1 Exhibit #9 and Allegation #1 Exhibit #10. In both letters, Ms. Kern states,

As a preliminary matter, your notice of intent does not meet the minimum required conditions necessary to be able to file and Intervention Affidavit. Specifically, your letter fails to identify a deadline by which you expect a response from the Association. The Intervention Affidavit From 530 specifically requires that you must "provide the Respondent with at least 10 business days to correct the alleged violation(s) pursuant to governing documents or NRS and NAC 116. See page 1, section 3 of Form 530.

905 LAKEVIEW DRIVE, DAYTON, NV 89403

I notified the Association prior to receiving Kern's June 21, 2021, letter and did not file Form 530 Intervention Affidavit until July 15, 2021, more than 18 days after receiving Kern's letter dated June 21, 2021. Kern's claim false.

In Kern's letter dated July 1, 2021, she states in the first paragraph that the Association's Community Manager received my complaint on June 28, 2021. Again, I did not file Form 530 until July 15, 2021, thirteen business days after the receipt of my complaint. Once again, Kern's claim that I did not give the Association ten (10) business days to respond is false.

The Association had more than ample time to act to follow NRS 116.3103, NRS 116.31034 (9)(a) and (10) between January 2021 and June 9, 2021. However, under the leadership of President Drury and under the legal opinions of Gayle Kern, Esq. most of the Board of Directors except for myself and Director Amy Puzzo followed along blindly without reviewing the applicable NRS 116 and NAC 116 statutes regarding the procedures for holding a legal annual election.

Sincerely,

Joseph F. Hughes

STEVE SISOLAK
Governor

TERRY REYNOLDS
Director

SHARATH CHANDRA
Administrator

CHARVEZ FOGER
Deputy Administrator

JASON O. WYATT
Ombudsman

STATE OF NEVADA
DEPARTMENT OF BUSINESS AND INDUSTRY
REAL ESTATE DIVISION
COMMON-INTEREST COMMUNITIES AND
CONDOMINIUM HOTELS PROGRAM
CICOmbudsman@red.nv.gov
http://www.red.nv.gov

July 18, 2022

Via Certified Mail Return Receipt Requested
7019 1120 0001 7373 3276

Dayton Valley Community Association
Dennis Drury
C/O CAMCO
Attn: Julie Thompson
Po Box 400518
Las Vegas, Nv 89140

Re: Case No. 2021-696 and 2021-761; Dayton Valley Community Association (the "Association")

Dear Mr. Drury and Board of Directors:

This letter is a follow-up to an investigation by the Division concerning the above-referenced case numbers.

In July of 2021, James H. Kepler SR was elected to the Association's board of directors. Since that time, the Association has allocated assessment funds to maintain the guard shack and road located at the Palmer Gate exit. These elements are not included in the plat map of the Association, and they are not identified as common elements required to be maintained by the Association.

It is alleged that the guard shack and road located at the Palmer Gate exit of the community are currently owned by Tour Specs Golf Management (Aka: Dayton Valley Golf Course). Public records indicate that the sole principal of Tour Specs Golf Management is Reliance Golf Management, and as of July 19th, 2017, Reliance Golf Management has been owned by James H. Kepler, SR.

It is alleged that through the allocation of funds from the Association for maintenance of property not owned or required to be maintained by the Association, James H. Kepler, SR, the owner of Reliance Golf Management, stands to gain from his position on the executive board.

Pursuant to NRS 116.31034(10)(a)(2), "except as otherwise provided in subsections 11 and 12, unless a person is appointed by the declarant: a person may not be a candidate for or member of the executive board or an officer of the association if the person stands to gain any personal profit or compensation of any kind from a matter before the executive board of the association." Further, pursuant to NRS 116.31034(13), "if a person is not eligible to be a candidate for or member of the executive board or an officer of the association pursuant to any provision of this chapter, the association:

(a) Must not place his or her name on the ballot; and

(b) **Must prohibit such a person from serving as a member of the executive board or an officer of the association**."

The executive board has failed to cooperate with the Division in resolving this matter by refusing to comply with the Compliance Demand Letter issued on August 27, 2021, instructing Mr. Kepler to either resign or be removed by the board. As of October 20, 2021, Mr. Kepler remains a Dayton Valley Community Association board member and the Association continues to maintain the golf course property.

The Division has obtained sufficient evidence to commence a disciplinary action against each of you as well as the Association and intends to do so by filing a complaint for hearing before the Commission for Common-Interest Communities and Condominium Hotels (the "Commission"). The violations alleged will include, but may not be limited to:

- NRS 116.31034
- NRS 116.3103
- NAC 116.405

Pursuant to NRS 116.785, if the Commission determines violations of law occurred, it may impose fines of up to $1,000 per violation. Additionally, the costs of the investigation and hearing, including attorney's fees, may be recovered. Failure to pay these sums in a timely manner may result in the institution of collection proceedings. Any documentation or other evidence you have to support your compliance with the above provisions should immediately be brought to the undersigned's attention. Upon consultation with its counsel, the Attorney General, the Division may be willing to resolve this matter through a negotiated settlement. This type of settlement must be presented to and approved by the Commission.

Sincerely,

Terry Wheaton

Chief Compliance Audit Investigator

cc.
Dennis Drury
662 St. Andrews Dr.
Dayton, NV 89403

Carla Cole
653 Saint Andrews Dr.
Dayton, NV 89403

Sandy Mass
285 La Costa Avenue
Dayton, NV 89403

Joan Latimer
104 Poppy Hills Court
Dayton, NV 89403

Steve Gallisdorfer
518 Stonehaven Court
Dayton, NV 89403

James Kepler
681 Saint Andrews Drive
Dayton, NV 89403

Michelle Carr
339 Bayhill Circle
Dayton, NV 89403